Alfa Laval Unique RV-ST

Regulating valves

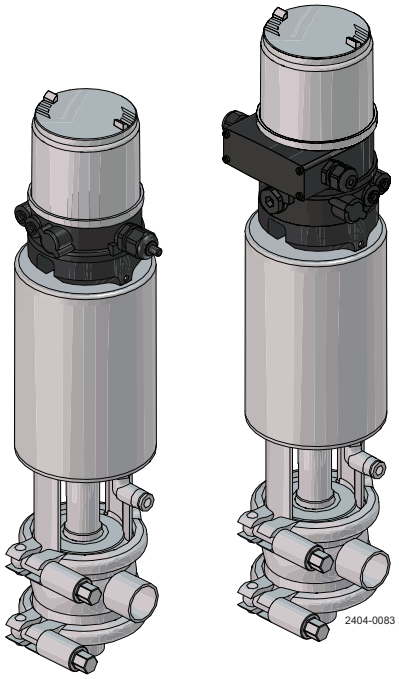

Lit. Code 200008011-3-EN-GB

Instruction Manual

British English

Published by
Alfa Laval Kolding A/S
Albuen 31
DK-6000 Kolding, Denmark
+45 79 32 22 00

The original instructions are in English

© Alfa Laval AB 2026-11

This document and its contents are subject to copyrights and other intellectual property rights owned by Alfa Laval AB (publ) or any of its affiliates (jointly "Alfa Laval"). No part of this document may be copied, re-produced or transmitted in any form or by any means, or for any purpose, without Alfa Laval's prior express written permission. Information and services provided in this document are made as a benefit and service to the user, and no representations or warranties are made about the accuracy or suitability of this information and these services for any purpose. All rights are reserved.

Contents

1 Declarations of Conformity 5

2 Safety 9
- 2.1 Safety Signs 10
- 2.2 Safety Precautions 12
- 2.3 Warning Signs in Text 17
- 2.4 Requirements of personnel 18
- 2.5 Recycling information 19

3 Introduction 21

4 Installation 23
- 4.1 Unpacking/Delivery 23
- 4.2 General Installation 24
- 4.3 Welding 26
- 4.4 Electrical connections 28

5 Operation 31
- 5.1 Operation 31
- 5.2 Troubleshooting 33
- 5.3 Recommended Cleaning 35

6 Maintenance 37
- 6.1 General maintenance 37
- 6.2 Dismantling of valve 40
- 6.3 Plug Seal Replacement (Elastomer) 41
  - 6.3.1 Removal of Plug Seal 41
  - 6.3.2 Pre-mounting of plug seal 41
  - 6.3.3 Mounting plug seal by hand 42
  - 6.3.4 Mounting plug seal with Alfa Laval plug seal tool 42
- 6.4 Assembly of valve 45
- 6.5 Assembly instruction for positioner 45
- 6.6 Actuator Bushing Replacement (Non-maintainable Actuator) 46
- 6.7 Dismantling and mounting of Fully Maintainable Actuator (Removable Yoke with Bolts/2006-June 2016) 50
- 6.8 Changing pneumatic movement on fully maintainable actuator (NC/NO) 51

7 Technical Data 53
- 7.1 Technical Data 53
- 7.2 Physical Data 54
- 7.3 Valve Body Combinations 54
- 7.4 Weight 54

8 Spare parts....55
8.1 Ordering spare parts....55
8.2 Alfa Laval service....55
8.3 Warranty - Definition....56

9 Parts lists and exploded views....57
9.1 Unique RV-ST regulating Valve (sizes 25 mm-51 mm / DN25-DN50)....57
9.2 Unique RV-ST regulating Valve (sizes 63,5 mm-101,6 mm / DN65-DN100)....58
9.3 Maintainable actuator (sizes 25 mm-51 mm / DN25-DN50)....59
9.4 Maintainable actuator (sizes 63,5 mm-101,6 mm / DN65-DN100)....60

1 Declarations of Conformity

EU Declaration of Conformity

The designated company

Alfa Laval Kolding A/S, Albuen 31, DK-6000 Kolding, Denmark, +45 79 32 22 00

Company name, address and phone number

Hereby declare that

Valve

Designation

Unique SSV PN10

Type

5099880 - 29999999999, AAX000000001 to AAX999999999, AAB000000001 to AAB999999999, ABJ000000001 to ABJ999999999.

Serial number

is in conformity with the following directives with amendments:

- Machinery Directive 2006/42/EC
- Pressure Equipment Directive (PED) 2014/68/EU *category 1 and subjected to assessment procedure Module A. May only be used for fluids in Group 2.*

The person authorised to compile the technical file is the signer of this document.

Vice President Business Unit Hygienic Fluid Handling and Heat Transfer Technologies, Head of Product Management	Mikkel Nordkvist
Title	Name
Kolding, Denmark	2026-10-01
Place	Date (YYYY-MM-DD)



Signature

DoC Revison_ 02_112025 / This Declaration of Conformity replaces Declaration of Conformity dated 2025-11-01

EU Declaration of Conformity

The designated company

Alfa Laval Kolding A/S, Albuen 31, DK-6000 Kolding, Denmark, +45 79 32 22 00

Company name, address and phone number

Hereby declare that

Valve

Designation

Unique SSV PN10

Type

5099880 - 29999999999, AAX000000001 to AAX999999999, AAB000000001 to AAB999999999, ABJ000000001 to ABJ999999999.

Serial number

is in conformity with the following directives with amendments:

- Regulation (EU) 2023/1230 on machinery
- Pressure Equipment Directive (PED) 2014/68/EU *category 1 and subjected to assessment procedure Module A. May only be used for fluids in Group 2.*

The person authorised to compile the technical file is the signer of this document.

Vice President Business Unit Hygienic Fluid Handling and Heat Transfer Technologies, Head of Product Management	Mikkel Nordkvist
Title	Name
Kolding, Denmark	2027-01-20
Place	Date (YYYY-MM-DD)



Signature

DoC Revison_03_012027

UK Declaration of Conformity

The designated company

Alfa Laval Kolding A/S, Albuen 31, DK-6000 Kolding, Denmark, +45 79 32 22 00

Company name, address and phone number

Hereby declare that

Valve

Designation

Unique SSV PN10

Type

5099880 - 29999999999, AAX000000001 to AAX999999999, AAB000000001 to AAB999999999, ABJ000000001 to ABJ999999999.

Serial number

is in conformity with the following directives with amendments:

- The Supply of Machinery (Safety) Regulations 2008
- The Pressure Equipment (Safety) Regulations 2016 *category 1 and subjected to assessment procedure Module A. May only be used for fluids in Group 2.*

Signed on behalf of: Alfa Laval Kolding A/S.

Vice President Business Unit Hygienic Fluid Handling and Heat Transfer Technologies, Head of Product Management	Mikkel Nordkvist
Title	Name
Kolding, Denmark	2026-10-01
Place	Date (YYYY-MM-DD)



Signature

DoC Revison_03_112025

This page is intentionally left blank.

2 Safety

Read this first





This Instruction Manual is designed for operators and service engineers working with the supplied Alfa Laval product.

Operators must read and understand the ***Safety, Installation and Operating*** instructions of the supplied Alfa Laval product before carrying out any work or before you put the supplied Alfa Laval product into service!

Not following the instructions can result in serious accidents.

This documentation describes the authorized way to use the supplied Alfa Laval product. Alfa Laval will take no responsibility for injury or damage if the equipment is used in any other way.

This Instruction Manual is designed to provide the user with the information to perform tasks safely for all phases in the lifetime of the supplied Alfa Laval product.

The operator shall always read the chapter ***Safety*** first. Hereafter the operator can skip to the relevant section for the task to be carried out or for the information needed.

Always read the chapter ***Technical Data*** thoroughly.

This is the complete Instruction Manual for the supplied Alfa Laval product.

NOTE

The illustrations and specifications in this Instruction Manual were effective at the date of printing. However, as continuous improvements are our policy, we reserve the right to alter or modify the Instruction Manual without prior notice or any obligation.

The English version of the Instruction Manual is the original manual. Alfa Laval cannot be held responsible for incorrect translations. In case of doubt, the English version applies.

2.1 Safety Signs

Mandatory Action Signs

	General mandatory action sign.
	Refer to instruction manual.
	Use eye protection - safety glasses.
	Use protective hand wear - safety gloves.
	Wear protective equipment - safety helmet.
	Use ear protection in noisy environments - noise protector.
	Wear protective equipment - safety shoes.

Warning Signs

	General warning.
	Transportation with forklift truck or other industrial vehicles if heavy.
	Hot surface and Burn Hazard.
	Cutting danger.
	Corrosive substance.
	Crushing of hands.
	Danger of injury (lasermarked on the actuator). Do **not** attempt to disassemble the actuator due to spring under load danger! (The lock wire opening is blocked).
	Danger of injury (lasermarked on the actuator). Do **not** attempt to cut open actuator due to spring under load danger! (The lock wire opening is blocked).
	Danger of injury (label marked on actuator). Do **not** attempt to cut the actuator open due to spring under load (the lock wire opening is locked).

2.2 Safety Precautions

All warnings in the Instruction Manual are summarised on these pages. Pay special attention to the instructions below so that severe personal injury and/or damage to the supplied Alfa Laval product is avoided.

General

	To prevent unexpected start and contact with electrical live and moving parts. **Always** disconnect the power supply and air supply safely: • The power supply disconnecting device and air supply must be disconnected (in off position) and locked.

Transportation and Lifting

	**Never** lift or elevate in any way other than described in this manual. **Always** use the original packaging or similar during transportation. **Always** ensure that personnel must have experience with lifting operations. **Always** ensure that all connections are disconnected before attempting to remove the valve from the installation. **Always** ensure that no leakage of lubricants can occur. **Always** drain liquid out of the valves before transportation. **Always** ensure sufficient fixing of the valve during transportation - if specially designed packaging material is available, it must be used. **Always** ensure that compressed air is released.
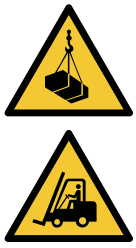	**Always** use designated lifting points if defined. Ensure that the lifting equipment is suitable for the supplied Alfa Laval product. **Always** ensure that the unit is securely fixed during transportation. **Always** ensure the lifting point to be in line with center of gravity. Adjust lifting point if necessary. **Always** use suitable transport device ie. forklift or pallet lifter. **Always** use appropriate lifting equipment for heavy parts when relevant. Use lifting logs when available. **Always** keep an eye on the load and stay clear during the lifting operation.

Installation

	If the local safety regulations prescribe that the installation has to be inspected and approved by responsible authorities before the valve is put into service, consult with such authorities before installing the equipment and have the projected installation approved by them. **Always** release compressed air after use. **Always** assemble the valve completely before startup and make sure everything is in place and correctly tightened.
	**Never** work on the valve or touch moving parts if the actuator is supplied with compressed air. **Always** ensure that the valve and pipelines are depressurized, emptied, and cooled down to ambient temperature before installation, inspection, assembly, or dismantling of the valve. **Never** touch the valve or the pipelines when processing hot liquids or when sterilising.
	Do **NOT** attempt to disassemble or by other means open the actuator due to spring under load danger!

Operation

	**Never** operate the valve unless a correct installation has been verified. **Never** dismantle the valve during operation or when pressurized.
	**Never** touch the valve or pipelines when hot. **Never** touch the valve or the pipelines when processing hot liquids or when sterilising.
	**Always** rinse well with clean water after cleaning. **Always** handle lye and acid with great care. **Always** follow the instructions in the safety data sheets from the suppliers of cleaning agents, detergents, oils etc.
	**Never** touch moving parts of the valve during operation. **Always** release compressed air after use.

Maintenance



In order to optimise the operation of the supplied Alfa Laval product and to minimize the down time due repair activities, the maintenance includes:

- Inspection and maintenance of the supplied Alfa Laval product: strictly follow the technical documentation
- **Preventive maintenance:** visual inspection of the supplied Alfa Laval product followed by necessary adjustments and planned periodic replacement of wear and tear parts
- **Repairs:** unscheduled break down of a component, often causing the system to stop. Damaged components must be replaced
- **Stock of Alfa Laval genuine spare parts:** Alfa Laval recommend keeping a stock of genuine spare parts facilitating preventive maintenance and reducing downtime in case of unplanned break downs





Always release compressed air after use.

Always ensure that the valve and pipelines are depressurized, emptied, and cooled down to ambient temperature before dismantling the valve.

Never stick your fingers through the valve ports if the actuator is supplied with compressed air.

Never work on the valve or touch moving parts if the actuator is supplied with compressed air.







Do **NOT** attempt to disassemble or by other means open the actuator due to spring under load danger!

Never pressurize the valve/actuator when the valve is serviced **unless specifically prescribed.**

Storage



Alfa Laval recommend:

- Store the supplied Alfa Laval product as supplied in original packaging
- Port opening(s) should be protected against any ingress
- Bare steel (not stainless) should be lightly oiled/greased
- Store in a clean, dry place without direct sunlight or UV light
- Temperature range -5 °C to +40 °C (23 °F - 104 °F)
- Relative humidity less than 60%
- No exposure to corrosive substances (including contained air)

Noise



Under certain operating conditions, the supplied Alfa Laval product and/or the systems in which they are installed can produce high sound pressure levels. Appropriate noise protection measures should be taken when necessary and in accordance with local legislation.

Hazards



Burn Hazard

- Lubrication oil, machine parts and various machine surfaces can be hot and cause burns. Wear protective gloves



Corrosive Hazard

- Always handle cleaning liquids, lye and acid with great care and in accordance with separate instructions for those fluids
- When using chemical cleaning agents and lubricants, make sure you follow the general rules and suppliers recommendation regarding ventilation, personnel protection etc.



Cut Hazard

- Sharp edges, especially on bowl discs and threads, can cause cuts. Wear protective gloves



Crushing Hazard

- Avoid placing hands into valve orifice pinch points

Health Hazard



Danger of injury: (an extra yellow label marked on the actuator from June 2016). Do **NOT** attempt to cut the actuator open due to spring under load. (The lock wire opening is locked).



Danger of injury (laser marked on the actuator). Do **NOT** attempt to disassemble the actuator due to spring under load danger! (The lock wire opening is locked).



Danger of injury (label marked on actuator). Do **NOT** attempt to cut the actuator open due to spring under load. (The lock wire opening is locked).

Safety check

	A visual inspection of any protective device (shield, guard, cover or other) on the supplied Alfa Laval product shall be carried out at least every 12 months. If the protective device is lost or damaged, especially when this leads to deterioration of safety performance, it shall be replaced. The fixing of the protective device should only be replaced with fixings of the same or an equivalent type. **Inspection acceptance criteria:** • It should not be possible to reach moving parts originally protected by a protective device • The protective device must be securely mounted • Ensure that screws for the protective device are securely tightened **Procedure in case of non-acceptance:** • Fix and/or replace the protective device

2.3 Warning Signs in Text

Pay attention to the safety instructions in this Instruction Manual.

Below are definitions of the four grades of warning signs used in the text where there is a risk for injury to personnel or damage to the supplied Alfa Laval product.

DANGER

Indicates an imminently hazardous situation which, if not avoided, will result in death or serious injury.

WARNING

Indicates a potentially hazardous situation which, if not avoided, could result in death or serious injury.

CAUTION

Indicates a potentially hazardous situation which, if not avoided, may result in minor or moderate damage to the supplied Alfa Laval product.

NOTE

Indicates important information to simplify or clarify procedures.

2.4 Requirements of personnel

Operators

The operators shall read and understand this Instruction Manual.

Maintenance personnel

The maintenance personnel shall read and understand this Instruction Manual. The maintenance personnel or technicians shall be skilled within the field required to carry out the maintenance work safely.

Trainees

Trainees can perform tasks under the supervision of an experienced employee.

People in general

The public shall not have access to the supplied Alfa Laval product.

In some cases, specially skilled personnel may need to be hired (i.e. electricians, welders). In some cases the personnel has to be certified according to local regulations with experience of similar types of work.

2.5 Recycling information

WARNING

If the actuator is marked with one of the below warnings, do NOT attempt to disassemble it.

The spring inside is under load — any type of breakage of the actuator can lead to severe injury or even death!



Unpacking

Packing material may consist of wood, plastics, cardboard boxes and in some cases metal straps.

	• Wood and cardboard boxes can be reused, recycled or used for energy recovery • Plastics should be recycled or burnt at a licensed waste incineration plant • Metal straps should be sent for material recycling

Maintenance

During maintenance, oil (if used) and wear parts in the supplied Alfa Laval product should be replaced.

- Oil and all non-metal wear parts must be disposed of in accordance with local regulations
- Rubber and plastics should be burnt at a licensed waste incineration plant. If not available they should be disposed of in accordance with local regulations
- Bearings and other metal parts should be sent to a licensed handler for material recycling
- Seal rings and friction linings should be disposed of to a licensed land fill site. Check your local regulations
- All metal parts should be sent for material recycling
- Worn out or defected electronic parts should be sent to a licensed handler for material recycling

Scrapping

At end of use, the equipment must be recycled in accordance with the relevant local regulations. Besides the equipment itself, any hazardous residues from the process liquid must be considered and dealt with in a proper manner. When in doubt, or in the absence of local regulations, please contact your local Alfa Laval sales company.

How to contact Alfa Laval

Contact details for all countries are continually updated on our website.

Please visit *www.alfalaval.com* to access the information directly.

This page is intentionally left blank.

3 Introduction

The Alfa Laval Unique RV-ST Regulating Valve is the third generation of the Alfa Laval single-seat regulating valve designed to meet the highest process demands of hygiene and safety. Built on a well-proven platform from an installed base of more than a million valves, it is ideal for high-volume, hygienic liquid processing applications that require precision control of flow rate or pressure.

RV-ST has a vast range of Kv-values to fit customers exact needs. 1½"-4" sizes come with a plug seal to also function as a shut-off valve, where 1" sizes do not have a plug seal.

This page is intentionally left blank.

4 Installation

4.1 Unpacking/Delivery

> **CAUTION**
>
> Alfa Laval cannot be held responsible for incorrect unpacking.

Check the delivery for:

1. Complete valve
2. Delivery note
3. Instruction Manual

Actuator version can be ordered either "fully maintainable" (no warning marked on actuator) or as "non-maintainable" (warning marked on actuator).

* = lasermarked warning

Non-maintainable actuator

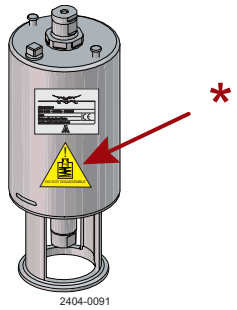

Fully maintainable actuator



Complete actuator

Pos.	Denomination
19	Clamp
20	Bonnet
22	Valve body
23	Valve plug
77.1	Positioner
79	Spindle
80	Special X-ring
81	Allen screw
82	Adapter
83	O-ring
84	Gasket for adapter
85	Puck sensor pad

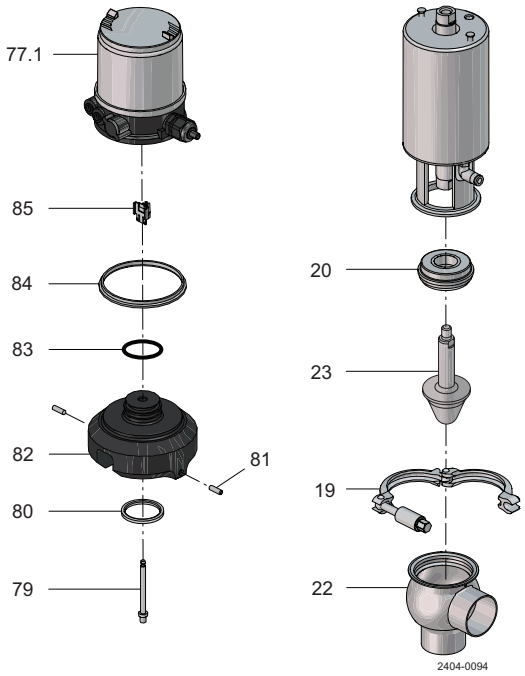

1. Remove possible packing materials from the valve/valve parts.

   Inspect the valve/valve parts for visible transport damage.

   Avoid damaging the valve/valve parts.

4.2 General Installation

NOTE

Alfa Laval cannot be held responsible for incorrect installation.

The valve has welding ends as standard but can also be supplied with fittings.

Always release compressed air after use.

Always read the *Technical Data* on page 53 thoroughly.

WARNING

If the actuator is marked with one of the below warnings, do NOT attempt to disassemble it.

The spring inside is under load — any type of breakage of the actuator can lead to severe injury or even death!



CAUTION

Never touch the moving parts if the actuator is supplied with compressed air.

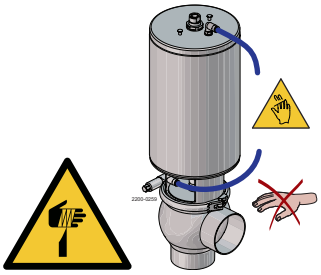

To avoid water hammering, it is recommended to install the valve so that the flow is against the spring closing direction.

Shock in the actuator must **never** occur.

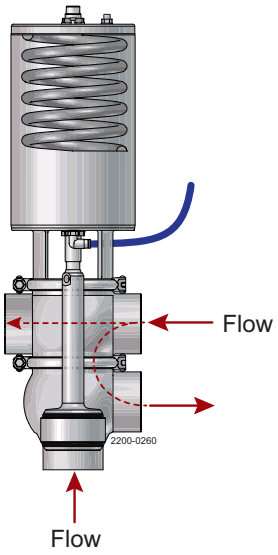

If support air is used: Pay special attention to shock in the actuator due to support air.

Shock in the actuator must **never** occur.

* = Careful if using support air on spring side and a high product pressure above the plug, as this can result in a high "hammer effect" which can damage the actuator. Use Alfa Laval part no. 9611995903, which ensures max. 3 bar (43.5 PSI) support air pressure. Alternatively remove the product pressure while activating the plug.

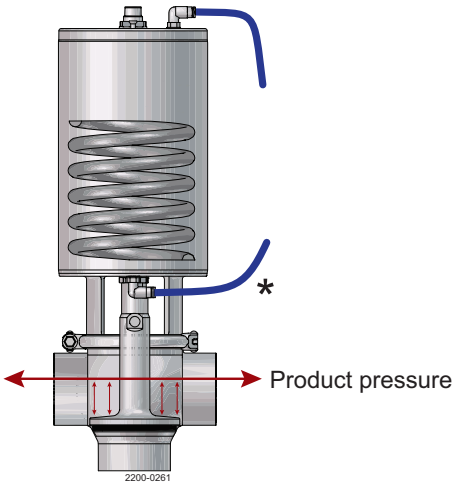

Avoid stressing the valve.

Pay special attention to:

- Vibrations
- Thermal expansion of the pipelines
- Excessive welding
- Overloading of the pipelines

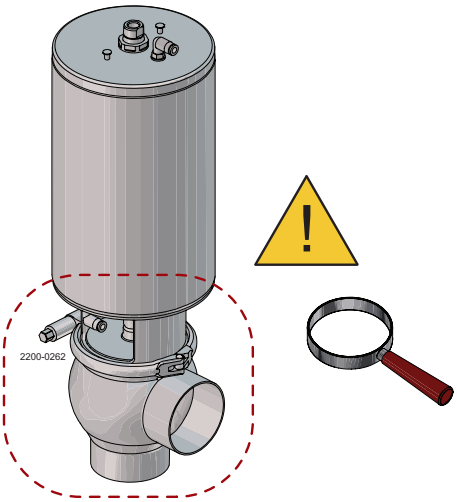

Make sure that the leak detection hole in the valve body:

1. is visible, when mounting the valve vertically
2. always is downwards due to self-draining, when the valve is mounted horizontally

* = Leakage detection hole

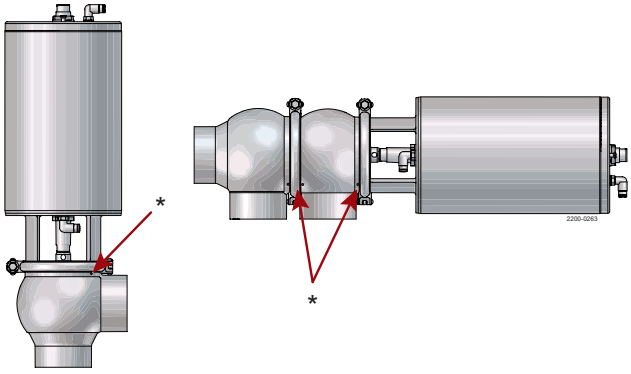

4.3 Welding

NOTE

Study the instructions carefully.

The valve is supplied as separate parts to facilitate welding.

The items refer to the parts list and service kits section.

Check the valve for smooth operation after welding.

Always install valves with more than one valve body so that the seals between the valve bodies can be replaced. Do not weld more than one valve body into the system.

Valve size	A (mm)	B (mm)
DN25 / 25 mm	*	630
DN40 / 38 mm	*	700
DN50 / 51 mm	*	750
DN65 / 63.5 mm	*	740
DN80 / 76 mm	*	800
DN100 / 101.6 mm	*	790

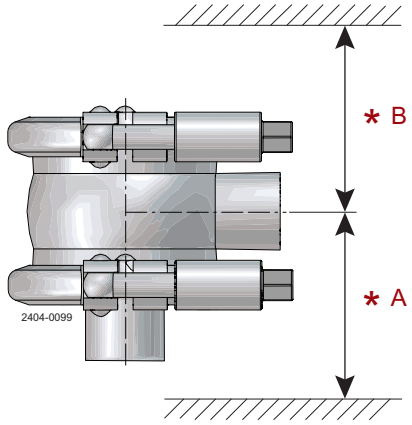

*A = Depending on body combination and piping solution.

*B = B (incl. top unit).

1. Assemble the valve in accordance with the steps in *Assembly of valve* on page 45.

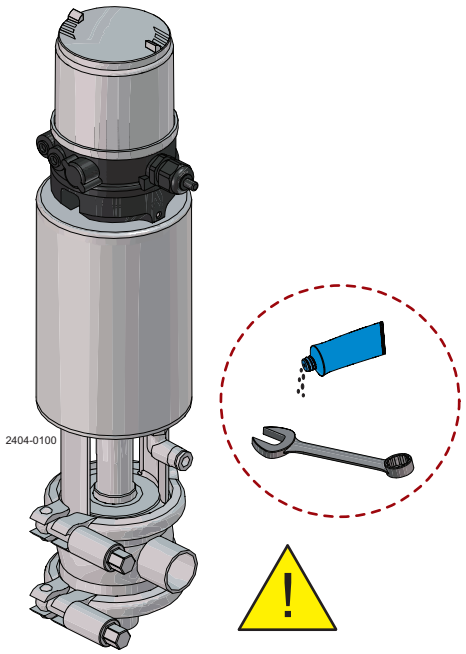

Pay special attention to the warnings!

2

Pre-use check:

a) Supply compressed air to the actuator

b) Open and close the valve several times to ensure that it operates smoothly

Pay special attention to the warnings!

* = Air

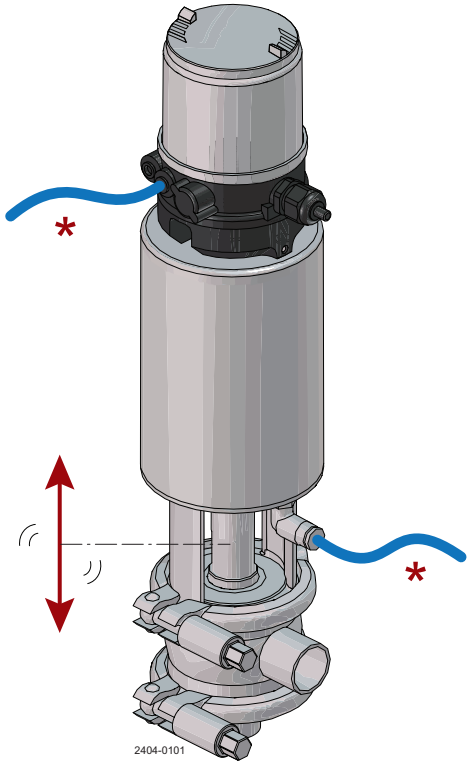

4.4 Electrical connections

Type 8694

Without Display

Without fieldbus communication 24 V DC

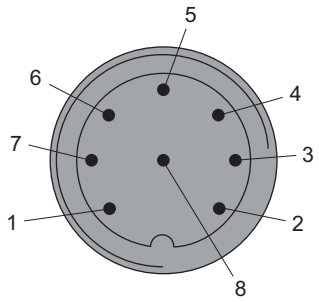

Pin	Pin Assignment
1	Setpoint + (0/4-20 mA)
2	Setpoint GND
3	Operating voltage GND
4	Operating voltage +24 V DC
5	Digital input +
6	Digital input GND
7	Analogue Position feedback GND
8	Analogue Position feedback +

Cable gland

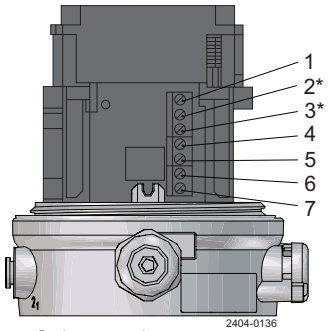

* Only as option

Input signal

Terminal	Pin Assignment
4	Setpoint +
5	Setpoint GND
1	Digital input +
6	Power supply +
7	Power supply GND

Output signal with analogue feedback option

Terminal	Pin Assignment
2	Analogue feedback +
3	Analogue feedback GND

Type 8692

With Display

Multipole connection

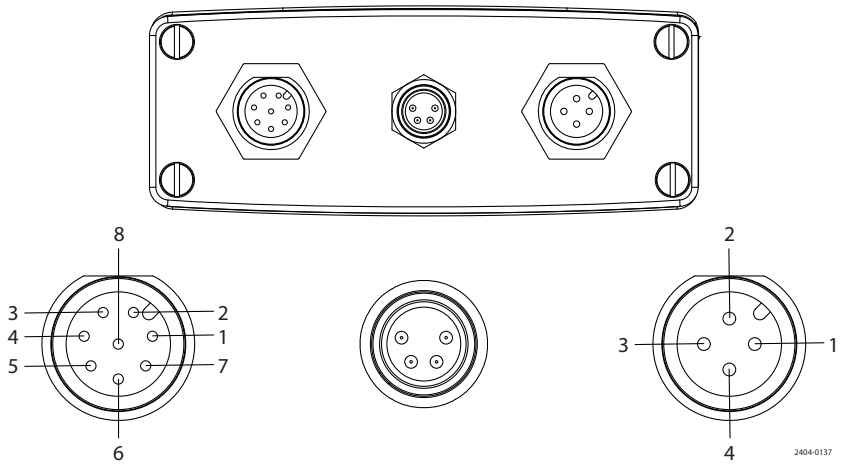

Pin	Pin Assignment
1	Setpoint + (0/4-20 mA or 0/5-10V)
2	Setpoint GND

Pin	Pin Assignment
1	Analogue feedback +
2	Analogue feedback GND
3	Digital output 1
4	Digital output 2
5	Digital output GND
6	Digital input +

Pin	Pin Assignment
1	Operating voltage +24 V DC
2	Operating voltage GND

Cable gland

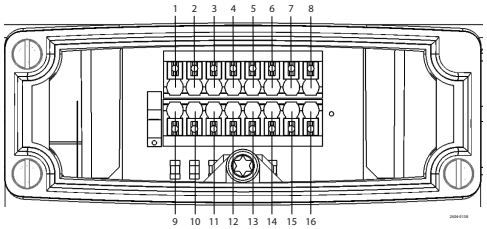

Terminal	Pin Assignment
1	Analogue feedback GND
2	Analogue feedback +
3	Digital output GND
4	Digital output 2
5	Digital output 1
6	Digital input +
7	Setpoint GND
8	Setpoint +
9	Not assigned
10	Not assigned
11	Not assigned
12	Not assigned
13	Not assigned
14	Digital input GND
15	Operating voltage GND
16	Operating voltage +24 V DC

This page is intentionally left blank.

5 Operation

5.1 Operation

NOTE

Study the instructions carefully and pay special attention to the warnings!

Ensure that the valve operates smoothly.

The items refer to *Parts lists and exploded views* on page 57.

Alfa Laval cannot be held responsible for incorrect installation.

Always release compressed air after use.

Always read the technical data thoroughly. See *Technical Data* on page 53.

Always use Alfa Laval genuine spare parts. The warranty of Alfa Laval products is dependent on use of Alfa Laval genuine spare parts.

WARNING

If the actuator is marked with one of the below warnings, do NOT attempt to disassemble it.

The spring inside is under load — any type of breakage of the actuator can lead to severe injury or even death!



WARNING

Never touch the valve or the pipelines when processing hot liquids or when sterilising.

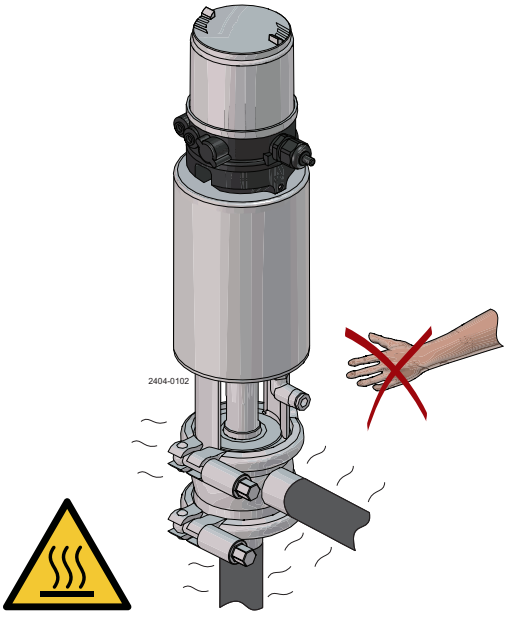

WARNING

Never touch the moving parts if the actuator is supplied with compressed air.

*) Air

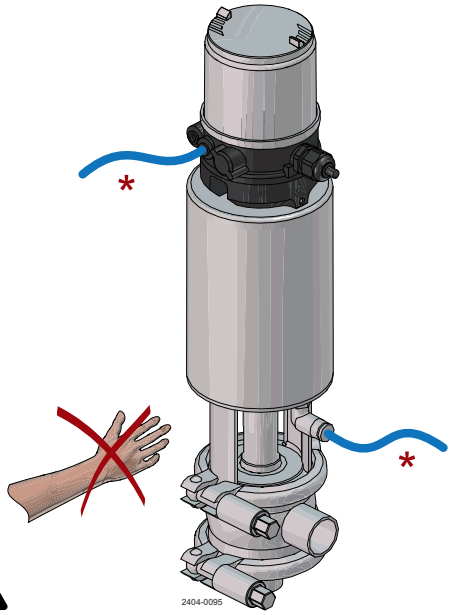

Lubrication of valves:

1. Ensure smooth movement between lip seal (25) and plug stem (23)
2. Lubricate with Alfa Laval Lubricant if necessary (see *General maintenance* on page 37)

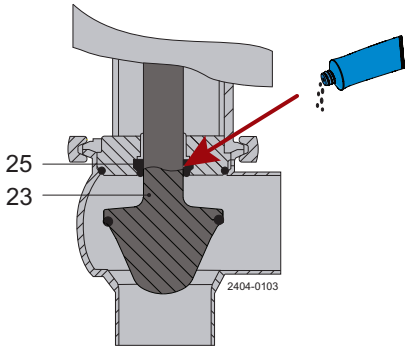

Lubrication of actuator:

1. Ensure smooth movement of the actuator (the actuator is lubricated before delivery)
2. Lubricate O-ring(s) with Molykote Longterm 2 plus if necessary

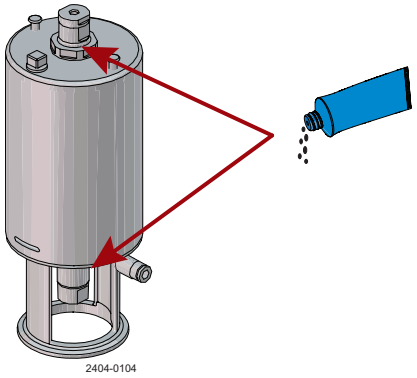

5.2 Troubleshooting

NOTE

Pay attention to possible faults.

Study the instructions carefully.

The items refer to *Parts lists and exploded views* on page 57.

WARNING

If the actuator is marked with one of the below warnings, do NOT attempt to disassemble it.

The spring inside is under load — any type of breakage of the actuator can lead to severe injury or even death!



NOTE

Study the maintenance instructions carefully before replacing worn parts. See *General maintenance* on page 37.

Problem	Cause/result	Repair
External product leakage	Worn or damaged lipseal and/or O-ring	• Replace the seals • Replace with seals of a different rubber grade
Internal product leakage	• Worn or product affected plug seal	• Replace the seal • Replace with a seal of a different rubber grade
	• Product deposits on the seat and/or plug	• Frequent cleaning
	• Product pressure exceeds actuator specification	• Replace with a high pressure actuator • Use auxiliary air on the spring side (do not exceed 3 bar / 43.5 psi). Alfa Laval article number = 9611995903. See *Safety* on page 9 and *General Installation* on page 24 • Reduce product pressure
Water hammer	The flow direction is the same as the closing direction	• The flow direction should be against the closing direction. See *General Installation* on page 24 • Throttle air release of solenoid in top unit
The valve does not open/close	Product pressure exceeds actuator specification	• Replace with a high pressure actuator • Reduce product pressure • Use auxiliary air on the spring side. Always use the pressure relief fittings (3 bar / 43.5 psi) on support side. Alfa Laval article number = 9611995903

5.3 Recommended Cleaning

WARNING **Risk of burns!**

Never touch the supplied product or the pipelines when sterilizing.



CAUTION

Always handle lye and acid with great care.



NOTE

The supplied product is designed for cleaning in place (CIP).

NaOH = Caustic soda.

HNO_3 = Nitric acid.

The cleaning agents must be stored/disposed of in accordance with current regulations/directives.

Examples of cleaning agents

NOTE

Use clean water free from chlorides.

Metric System

1. 1% by weight NaOH at 70°C

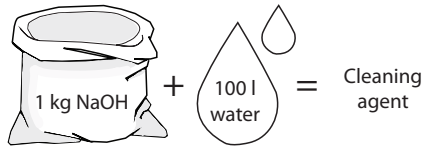

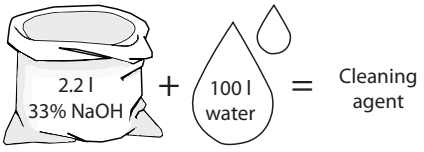

2. 0.5% by weight HNO_3 at 70°C

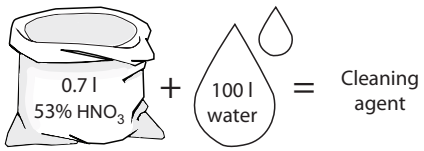

Imperial System

1. 1% by weight NaOH at 158°F

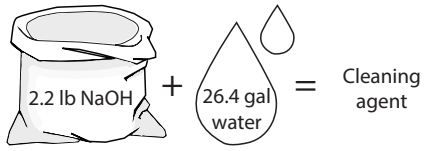

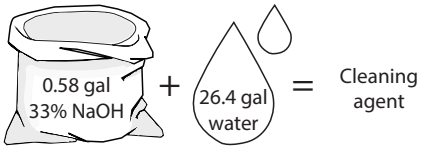

2. 0.5% by weight HNO_3 at 158°F

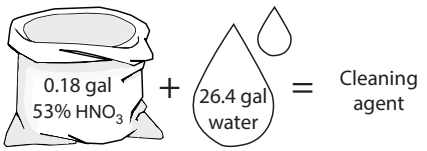

1. Avoid excessive concentration of the cleaning agent ⇒ **Dose gradually!**
2. Adjust the cleaning flow to the process **Milk sterilization/viscous liquids ⇒ Increase the cleaning flow!**

> **CAUTION**
>
> **Always** rinse well with clean water after the cleaning.

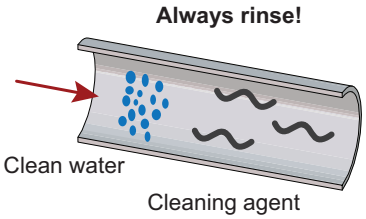

6 Maintenance

6.1 General maintenance

NOTE

Alfa Laval cannot be held responsible for incorrect installation.

Always release compressed air after use.

Always read the technical data thoroughly. See *Technical Data* on page 53

Always use Alfa Laval genuine spare parts. The warranty of Alfa Laval products is dependent on use of Alfa Laval genuine spare parts.

WARNING

If the actuator is marked with one of the below warnings, do NOT attempt to disassemble it.

The spring inside is under load — any type of breakage of the actuator can lead to severe injury or even death!



WARNING

Never service the valve when it is hot.

Never service the valve with valve and pipelines under pressure.

* = Atmospheric pressure required!

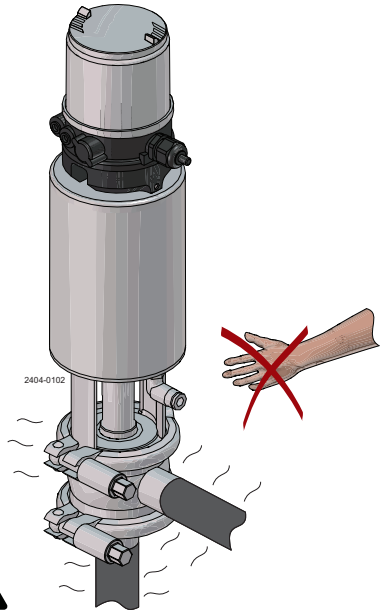

WARNING

Never stick your fingers through the valve ports if the actuator is supplied with compressed air.

Never touch the moving parts if the actuator is supplied with compressed air.

* = Air

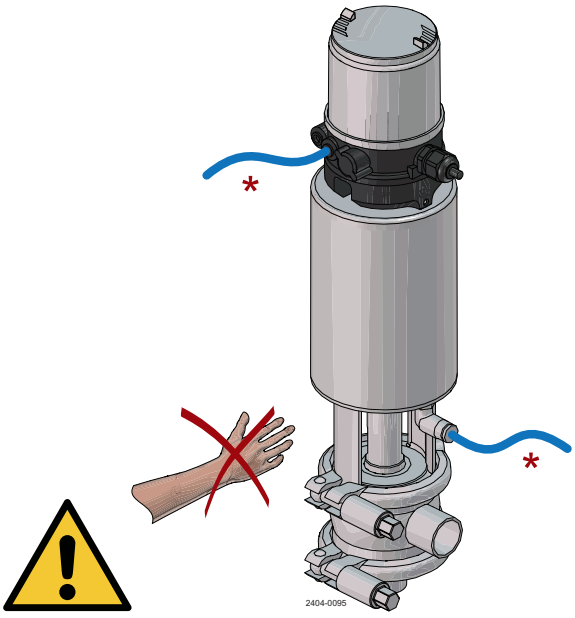

Below are some guidelines for maintenance and lubrication intervals. Please note that the guidelines are for normal working conditions in one shift.

	Product wetted seals	Actuator bushings complete
Preventive maintenance	**Replace after 12 months depending on working conditions**	**Replace after 5 years depending on working conditions**
Maintenance after leakage (leakage normally starts slowly)	**Replace at the end of the day**	**Replace when possible**
Planned maintenance	• Regular inspection for leakage and smooth operation • Keep a record of the valve • Use the statistics for inspection planning **Replace after leakage**	• Regular inspection for leakage and smooth operation • Keep a record of the actuator • Use the statistics for inspection planning **Replace after leakage**
Lubrication	**Before fitting** Alfa Laval Silicon based Food-grade Lubricant USDA H1 approved grease	**Before fitting** Molykote Longterm 2 plus

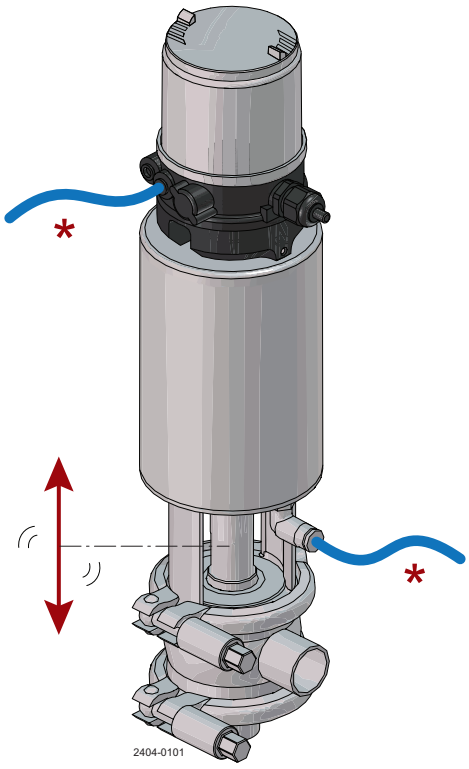

Pre-use check:

1. Supply compressed air to the actuator.
2. Open and close the valve several times to ensure that it operates smoothly
   Pay special attention to the warnings!

* = Air

6.2 Dismantling of valve

NOTE

The items refer to *Parts lists and exploded views* on page 57.

Handle scrap correctly.

NC = Normally closed.

NO = Normally open.

WARNING

If the actuator is marked with one of the below warnings, do NOT attempt to disassemble it.

The spring inside is under load — any type of breakage of the actuator can lead to severe injury or even death!



1. Supply compressed air to the actuator (only NC)
2. Loosen and remove clamp
3. Release compressed air (only NC)
4. Lift away the actuator
5. Unscrew and remove valve plug
6. Remove O-ring, lip seal and bushing in bonnet. (Use bushing tool and rubber mallet)

Pay special attention to the warnings!

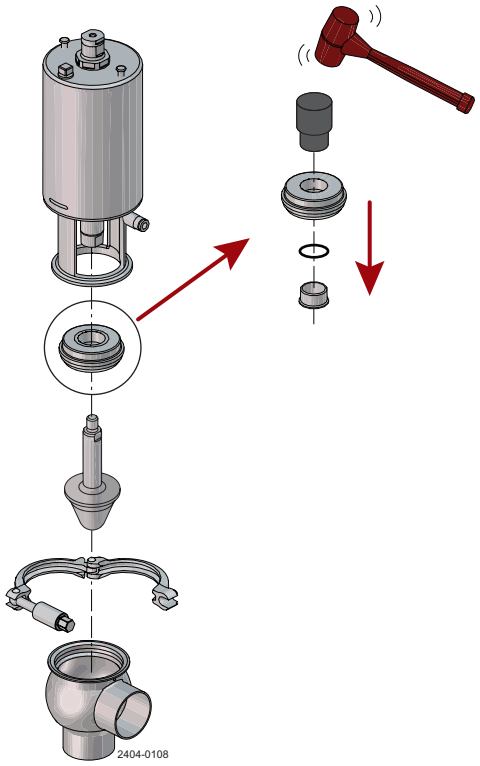

NOTE

For plug seal replacement please see *Plug Seal Replacement (Elastomer)* on page 41

6.3 Plug Seal Replacement (Elastomer)

6.3.1 Removal of Plug Seal

Remove old seal ring using a knife, screwdriver or similar. Be careful not to damage the plug surface.

> **NOTE**
>
> Be careful not to scratch the plug surface.

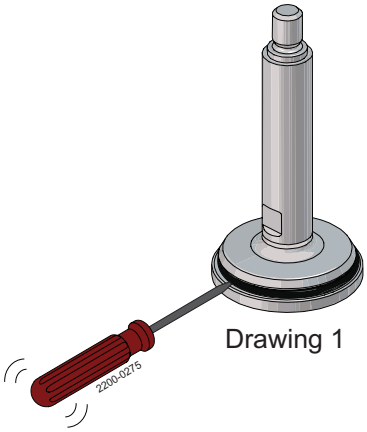

Drawing 1

6.3.2 Pre-mounting of plug seal

1. Lubricate the new plug seal with Alfa Laval Silicone based Food-grade Lubricant, which is included in the service kit.

   Only a small amount is needed.

2. Fit the plug seal onto the plug seal groove.

   > **NOTE**
   >
   > Be careful not to twist the plug seal.

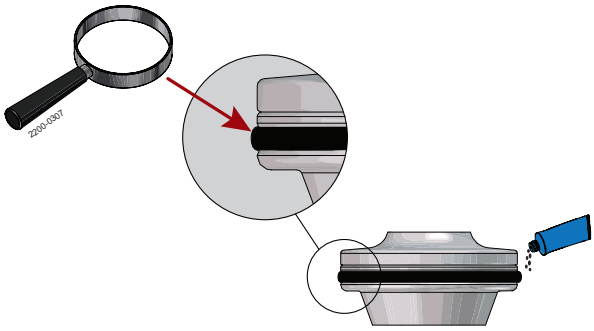

Drawing 2

3. The plug seal can now be mounted by hand or with the Alfa Laval plug tool.

6.3.3 Mounting plug seal by hand

1. Ensure full circumferential seating of the sealing by applying opposite pressure with your fingers. Eg. A - B and C - D.

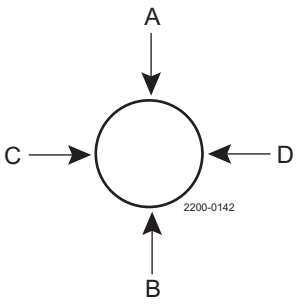

If a bulge is present, apply pressure on the plug seal and keep the pressure while rotating the plug 360°.

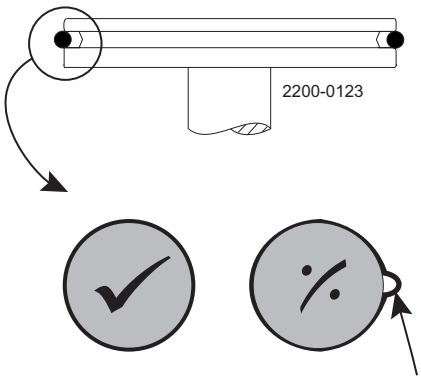

2. If necessary, trapped air behind the plug seal. can be relieved by use of a small flat-blade screwdriver.

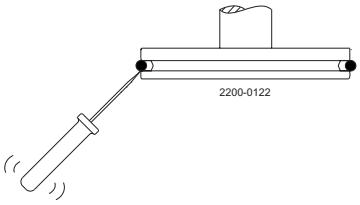

> **NOTE**
>
> Be careful not to scratch the surface of the plug and/or damage the seal.

6.3.4 Mounting plug seal with Alfa Laval plug seal tool

Mounting tool for elastomer plug seals	DN40 38 mm	DN50 - DN65 51 mm - 63.5 mm	DN80 - DN100 76.1 mm - 101.6 mm
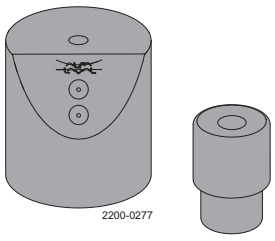	9613172901	9613172902	9613172903

A. Part A
B. Part B
C. Plugs
D. O-ring
E. Alfa Laval Silicone based Food-grade Lubricant from service kit
F. Flat-blade screwdriver (no sharp corner)
G. Exhaust holes for screwdriver
H. Ø20 hole for plug spindle

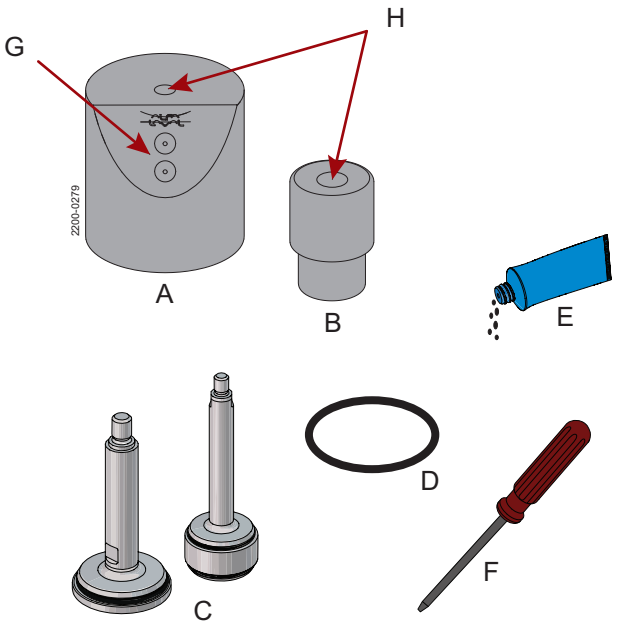

1 Assembly

For shut-off plug - See drawing 1.
For reverse acting plug - See drawing 2.
For change-over plug - See drawing 1 + 2.

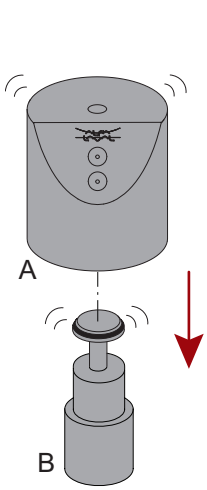

Drawing 1

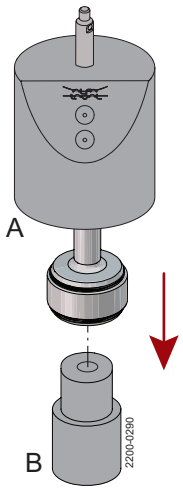

Drawing 2

2

a) Fit the plug according to plug type.

b) Apply force to push Part A and B together which will ensure full circumferential seating of the sealing.

c) To relieve trapped air behind the plug sealing, insert the flat-blade screwdriver through the applicable exhaust hole on part A and fit it between the plug sealing and plug.

With the flat-blade screwdriver fitted apply force again and a single "hiss" sound can be heard.

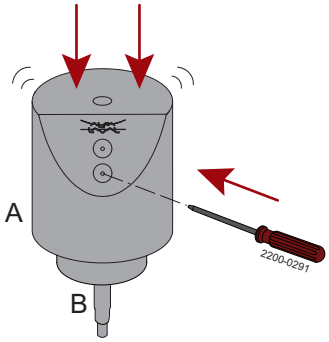

NOTE

Be careful not to scratch the surface of the plug and/or damage the seal.

6.4 Assembly of valve

Reverse order of *Dismantling of valve* on page 40.

Lubricate O-ring (21) and lip seal (25) with Alfa Laval Lubricant.

Remember to tighten spindle and plug (use two 17 mm spanners).

- Change-over plug tighten torque = **30 Nm**
- Shut-off plug tighten torque = **20 Nm**

If there are vibrations in the pipeline, Alfa Laval recommends to use Loctite no. 243.

The clamps' thread must be lubricated before tightening - max. torque for the clamps is 10-12 Nm.

6.5 Assembly instruction for positioner

1. Mount the indication spindle (79) in top of actuator spindle (5)
2. Mount adapter (82) on top of actuator
3. Fasten adapter by cross tighten the screws (81)
4. Mount the sensor pad (85) on the top of the induca-tion spindle (79)
5. Remove top lid (a) from positioner (77.1/77.2)
6. Grease seals lighty before assembly of the other parts with Alfa Laval Lubricant
7. Centring the sensor pad (85) in the guide rail inside the positioner when mounting the positioner unit (77.1/77.2) down over the adapter
8. Fasten positioner (77.1/77.2) by cross tighten the screws
9. Bring the actuator in top position (by using air if neces-sary)
10. Wire the electric connections according to "Quick start guide"
11. Assemble the cover (c) and the top lid (a) again
12. Mount the actuator on the valve and make the settings according to "Quick start guide"

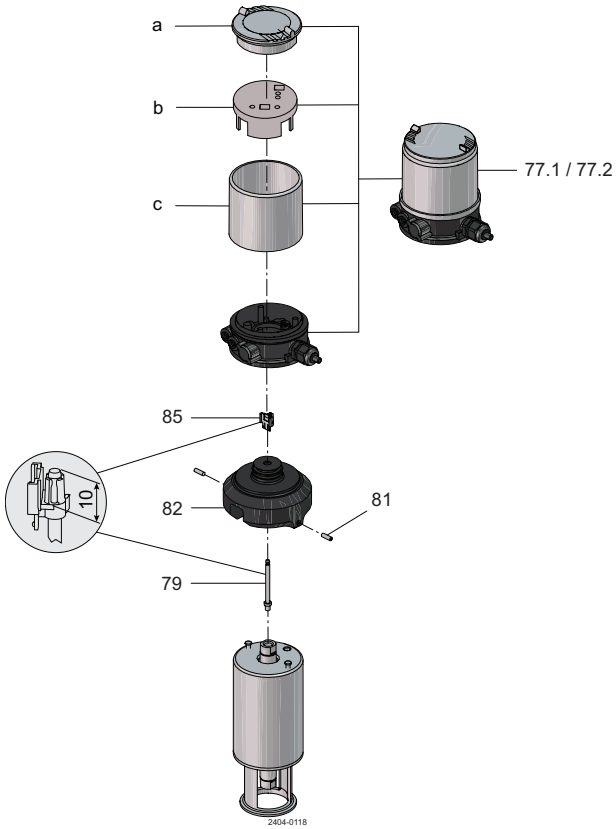

6.6 Actuator Bushing Replacement (Non-maintainable Actuator)

WARNING

If the actuator is marked with one of the below warnings, do NOT attempt to disassemble it.

The spring inside is under load — any type of breakage of the actuator can lead to severe injury or even death!



Introduction

- The actuator service kit contains two bushings and four O-rings
- Mount the thick O-ring inside and the thin O-ring outside the bushing
- Lubricate the stem and O-rings with "Molykote Longterm 2 Plus" or an equivalent grease before sliding the new bushings onto the actuator stem



Introduction - Standard tubular box wrench

Use a 27 mm (11/16") tubular box wrench to unmount and/or mount the bushings.

This tool will allow the actuator stem to fit inside and will provide good access to the bushing placed in the actuator yoke end.

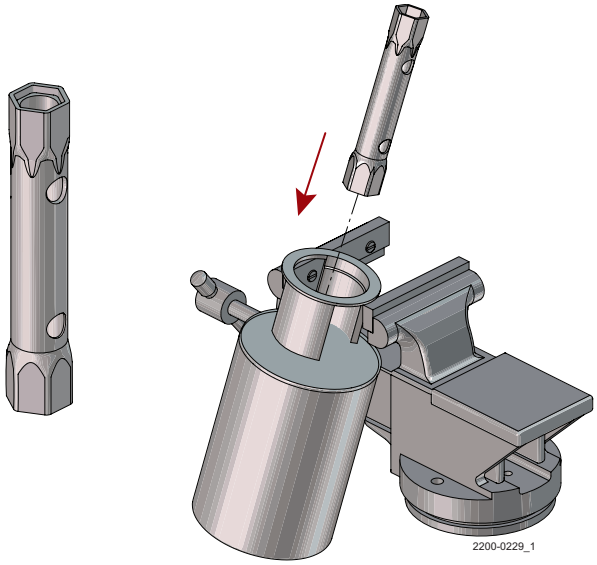

Introduction - Aligning spindle

The actuator spindle can in some cases be forced off centre by the internal spring, as shown.

In cases with misalignment of the actuator stem in relation to the bushing thread, as shown, the tubular box wrench together with a spindle for alignment is a great help and will ensure a reliable mounting of the bushing.

The aligning spindle can either be purchased from Alfa Laval (**9614198401**) which also include a 27 mm (1 1/16") tubular box wrench or it can be manufactured locally using below dimensions.

Dimension A is based on a tubular box wrench with a total length of 185 mm (7 1/4").

Dimensions
A = 280 mm (11")
B = 16 mm (0.63")
C = Rod Ø20 mm (0.79")
D = M12 x 1.5

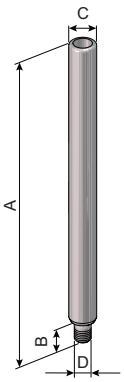

Spindle forced off centre by spring inside actuator

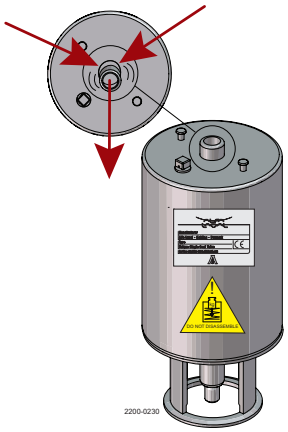

1. The actuator must be fixed in a vice, Alfa Laval recommend use of soft jaws.

   Be careful not to damage the yoke by over tightening and only fix carefully on the "yoke leg", as shown.

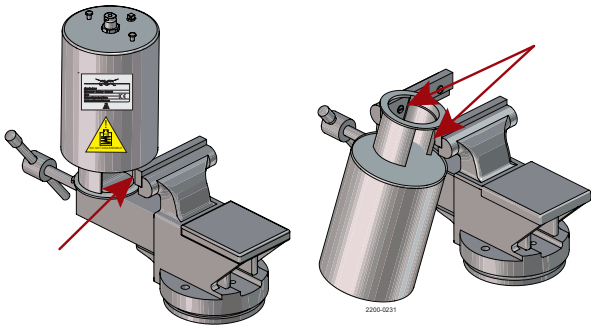

2. Remove the adaptor screw.

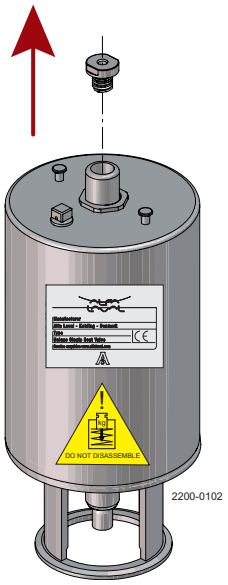

3 Slide the lubricated bushing onto the actuator stem.

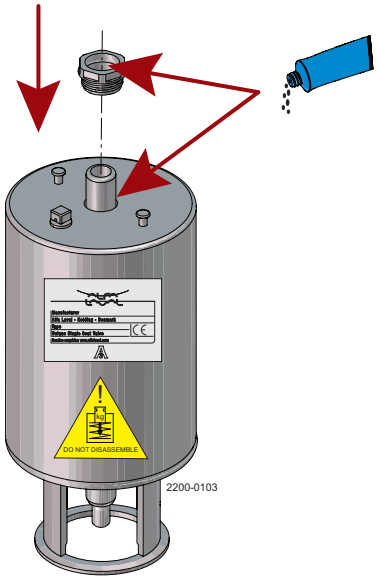

4 Fit the aligning spindle to the actuator stem and apply the tubular box wrench.

Aligning spindle

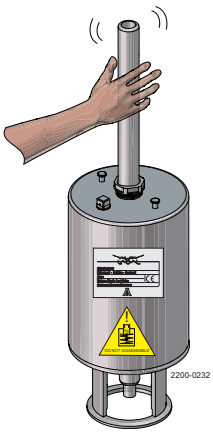

Tubular box wrench

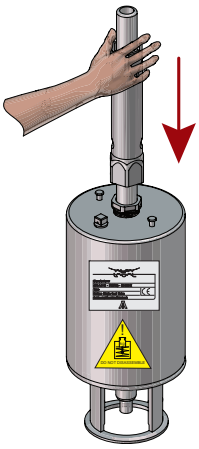

5 Now pull the aligning spindle to center the actuator stem in relation to the bushing thread. When centered, initiate fastening of the bushing. Ensure the thread catches evenly!

The bushing must only be tightened with a torque of 10 Nm (7 lb-ft) which is achievable by hand tightening only.

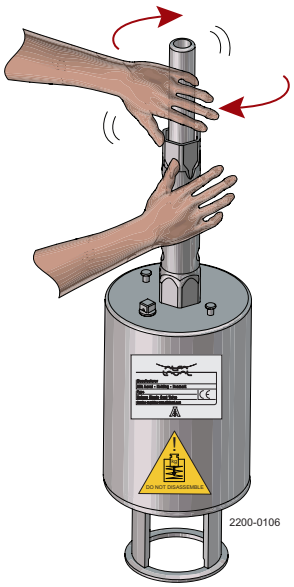

6 Mount adaptor screw.

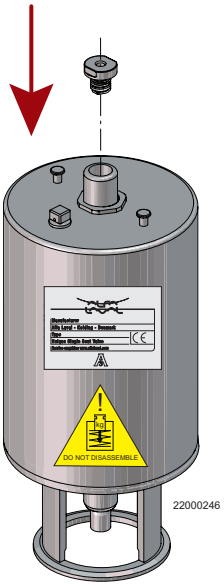

6.7 Dismantling and mounting of Fully Maintainable Actuator (Removable Yoke with Bolts/2006-June 2016)

WARNING

If the actuator is marked with one of the below warnings, do NOT attempt to disassemble it.

The spring inside is under load — any type of breakage of the actuator can lead to severe injury or even death!



1

Before dismantling check that the actuator is not marked with a warning.

1. Rotate the cylinder with service tool
2. Remove lock wire and pull away cylinder
3. Unscrew nuts and remove yoke
4. Top and bottom bushings
5. Remove piston with O-ring and spring assembly
6. Remove O-rings and support disc

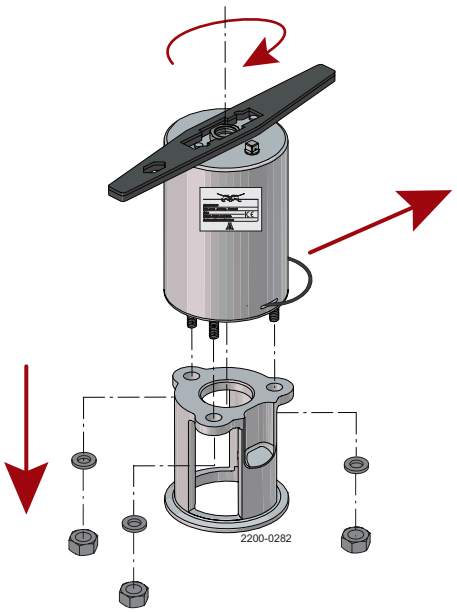

NOTE

The Air/Air actuator has no spring assembly.

2

1. Lubricate O-rings (3, 7, 11) with "Molykote Longterm 2 plus" or an equivalent grease before mounting
2. Tighten nuts to a torque of 17 Nm (12 lbf - ft)
3. Assemble the actuator in reverse order of step 1
4. Follow the assembly procedure in section 6.6 for installing the bushings

6.8 Changing pneumatic movement on fully maintainable actuator (NC/NO)

WARNING

If the actuator is marked with one of the below warnings, do NOT attempt to disassemble it.

The spring inside is under load — any type of breakage of the actuator can lead to severe injury or even death!



Before dismantling check that the actuator is not marked with a warning.

1. Remove adaptor screw, air fitting and air plug
2. Rotate the cylinder with service tool
3. Remove lock wire and pull away cylinder
4. Reverse piston and spring assembly inside cylinder
5. Reassemble in reverse order (c. to a.)
6. Mount adaptor screw, air fitting and air plug in accordance with NC or NO

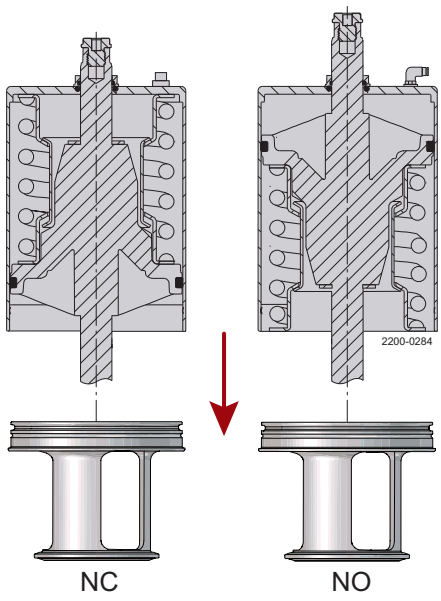

NC = Pneumatic movement - upwards

NO = Pneumatic movement - downwards

NOTE

The A/A actuator has no spring assembly.

This page is intentionally left blank.

7 Technical Data

> **NOTE**
>
> Technical data must be observed during installation, operation and maintenance.
>
> All personnel should be informed about the technical data.

7.1 Technical Data

Pressure	
Max. product pressure:	10 bar / 1000 kPa / 145 psi
Min. product pressure:	Full vacuum
Air pressure:	5 - 7 bar / 500 to 700 kPa / 72.5 to 101.5 psi

Temperature	
Temperature range:	-10 °C to +140 °C / +14 °F to +284 °F (EPDM)

Positioner data	
Supply voltage:	24 VDC +/- 10%
Working temperature:	0 °C to 55 °C / 32 °F to 131 °F
Push-in fittings:	Ø6 mm or ¼" / Push-in connector (external Ø6 mm or 1/4") or threaded ports G ⅛
Protection class:	IP65 and IP67 according to EN 60529 (NEMA4x in preparation)
Position detection module:	Contact-free, wear-free
Communication:	Analog

8692 Positioner – Top control with display	
Setpoint setting:	0/4-20 mA or 0/5-10V
Output resistance:	0/4-20 mA: 180Ω 0/5-10V: 19Ω
Power consumption:	< 5W
Cable gland:	2 x M16 (cable-ø10 mm), terminal screws (1.61 ft^2)
Max. wire diameter:	1.5 mm^2 / 0.06 in^2

8694 Positioner – Basic control without display	
Setpoint setting:	0/4-20 mA
Output resistance:	180Ω
Power consumption:	< 3,5W
Cable gland:	2 x M16 (cable-ø10 mm) , terminal screws (1.61 ft^2)
Max. wire diameter:	1.5 mm^2 / 0.06 in^2

Control medium:	**Neutral gases, air DIN ISO 8573-1**
Dust concentration	Class 5 (<40 µm particle size)
Particle density	Class 5 (<10 mg/m^3)

[1] The supply pressure has to be 0.5-1 bar (7.25-14.5 psi) above the minimum required pilot pressure for the valve actuator.

Control medium:	**Neutral gases, air DIN ISO 8573-1**
Pressure condensation point	Class 3 (<-20 °C / 68 °F)
Oil concentration	Class 5 (<25 mg/m^3)
Ambient temperature	0 °C to +60 °C (32 °F to 140 °F)
Pilot air ports	Push-in connector (external Ø6 mm or ¼") or threaded ports G⅛
Supply pressure	Low air flow rate 5 to 7 bar[1]
Air input filter	Exchangeable (mesh aperture ~0.1 mm)
Position detection module	Contact-free, wear-free
Stroke range valve spindle	3 mm to 28 mm
Installation	As required, preferably with actuator in upright position

[1] The supply pressure has to be 0.5-1 bar (7.25-14.5 psi) above the minimum required pilot pressure for the valve actuator.

Electrical connection:	
Cable gland (in preparation)	1 x M16 x 1.5 (cable - ø5 - 10 mm), terminal screws (1.5 mm[1])
Protection class	3 according to VDE 0580
Conformity	CE acc. to EMC 2004/108/EC

[1] The supply pressure has to be 0.5-1 bar (7.25-14.5 psi) above the minimum required pilot pressure for the valve actuator.

7.2 Physical Data

Materials	
Positioner Base:	PPS, stainless steel
Positioner Cover:	PC
Positioner Seals:	EPDM
Product wetted steel parts:	1.4404 (316L)
External finish:	Semi-bright (blasted)
Internal finish:	Bright (polished), internal Ra < 0.8 µm / < 32 µ inch
Other steel parts:	1.4301 (304)
Plug seal:	EPDM (optional HNBR or FPM)
Other product wetted seals:	EPDM (optional HNBR or FPM)
Other seals:	NBR

7.3 Valve Body Combinations

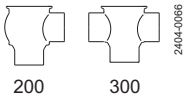

7.4 Weight

Size	**25 mm**	**38 mm**	**51 mm**	**63.5 mm**	**76.1 mm**	**101.6 mm**	**DN25**	**DN40**	**DN50**	**DN65**	**DN80**	**DN100**
Weight (kg)	3.1	7.3	9.5	10.5	16.4	18.6	3.2	7.3	9.5	10.5	16.4	18.6

8 Spare parts

For every delivered Alfa Laval Product, a spare part list is available.

This spare part list contains a range of the most common wear parts for the machinery. If any component not mentioned is required, please contact your local Alfa Laval representative for availability.

You can find our spare part catalogue at *https://hygienicfluidhandling-catalogue.alfalaval.com*.

Always use Alfa Laval genuine spare parts. The warranty of Alfa Laval products is dependent on use of Alfa Laval genuine spare parts.

8.1 Ordering spare parts

When ordering spare parts, please always state:

1. Serial number (if available)
2. Item number/spare part number (if available)
3. Capacity or other relevant identification

8.2 Alfa Laval service

Alfa Laval is represented in all larger countries of the world.

Do not hesitate to contact your local Alfa Laval representative, with any questions or requirement of spare parts for Alfa Laval equipment.

8.3 Warranty - Definition

WARNING

The rules of Intended use are absolute. Use of the supplied Alfa Laval product is allowed only when in compliance with the technical data supplied with the Intended use.

Differing utilisation, other than agreed with Alfa Laval Kolding A/S, exclude any liability and warranty.

No modification or alteration of the supplied Alfa Laval product is allowed, unless explicit permission is granted by Alfa Laval Kolding A/S.



Liability and warranty are excluded:

- If advice and instruction of operating instructions are ignored
- For incorrect operation or for insufficient maintenance of the supplied Alfa Laval product
- For any kind of change of function of the supplied Alfa Laval product without prior written agreement by Alfa Laval Kolding A/S
- If supplied Alfa Laval product is modified by non-authorised persons
- If using the supplied Alfa Laval product without attention of appropriate safety regulations, (see *Safety* on page 9)
- If protection equipment is not used and vessel process / ancillary equipment is not brought to a standstill
- If the supplied Alfa Laval product and ancillary parts are not properly maintained (to be executed in intervals and including fitting of prescribed replacement parts)

When exchanging parts, only original replacement parts, released from the manufacturer, must be used.

9 Parts lists and exploded views

9.1 Unique RV-ST regulating Valve (sizes 25 mm-51 mm / DN25-DN50)

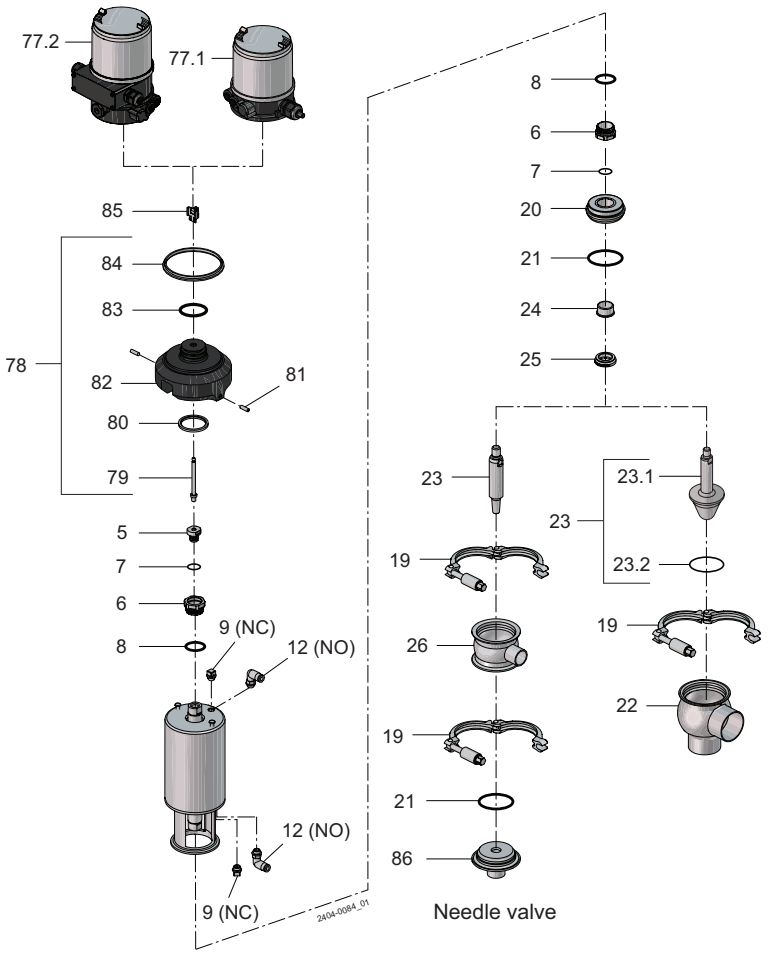

Pos.	Qty.	Denomination
		Actuator
6	2	Bushing
7	2	O-ring
8	2	O-ring
9	1	Plug
12	1	Air fitting
	1	Clamp
20	1	Bonnet
21	2	O-ring
22	1	Valve body, lower
23	1	Needle
23.1	1	Plug, ISO, Kv 4
23.2	1	Plug seal,
24	1	Bushing

Pos.	Qty.	Denomination
25	1	Lip seal, EPDM (standard)
26	1	Valve body, upper
76	1	Positioner
77.1	1	Positioner
77.2	1	Positioner - US
78	1	Adapter, cpl. (incl. pos. 79 to 84)
79	1	Spindle
80	1	Special X-ring
81	2	Allen screw
82	1	Adapter
83	1	O-ring
84	1	Gasket for adapter
85	1	Puck sensorpad, cpl.
86	1	Valve body base

9.2 Unique RV-ST regulating Valve (sizes 63,5 mm-101,6 mm / DN65-DN100)

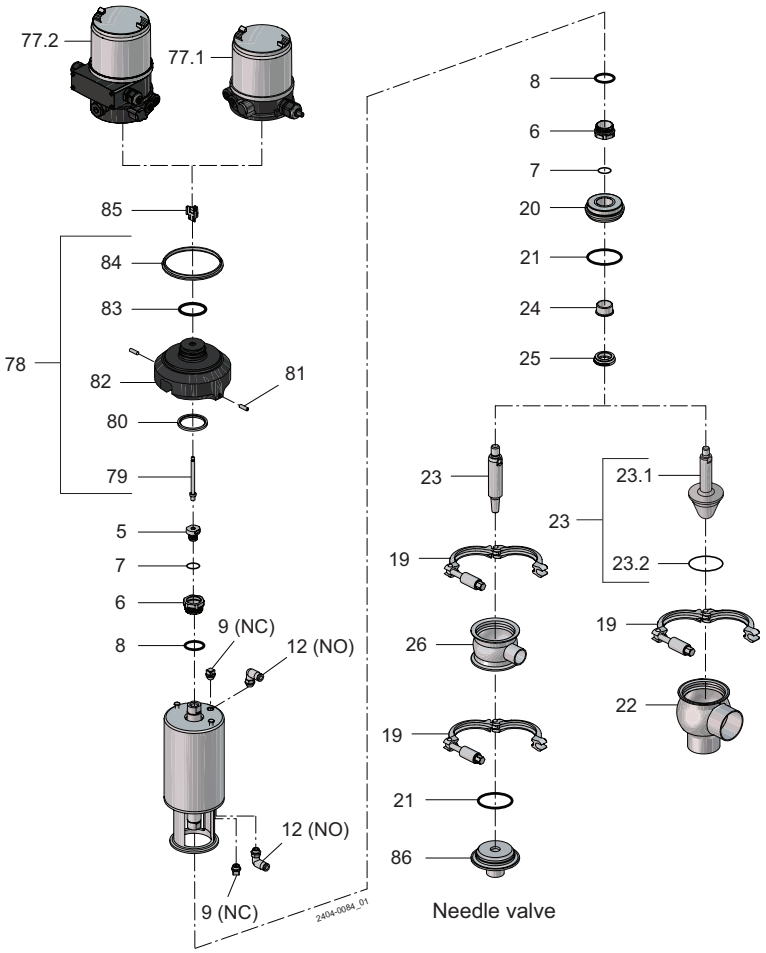

Pos.	Qty.	Denomination
		Actuator
20	1	Bonnet
21	2	O-ring
22	1	Valve body, lower
23	1	Needle
	1	Plug
24	1	Bushing
25	1	Lip seal
26	1	Valve body, upper
76	1	Positioner
77.1	1	Positioner

Pos.	Qty.	Denomination
77.2	1	Positioner - US
78	1	Adapter, cpl. (incl. pos. 79 to 84)
79	1	Spindle
80	1	Special X-ring
81	2	Allen screw
82	1	Adapter
83	1	O-ring
84	1	Gasket for adapter
85	1	Puck sensorpad, cpl.
86	1	Valve body base

9.3 Maintainable actuator (sizes 25 mm-51 mm / DN25-DN50)

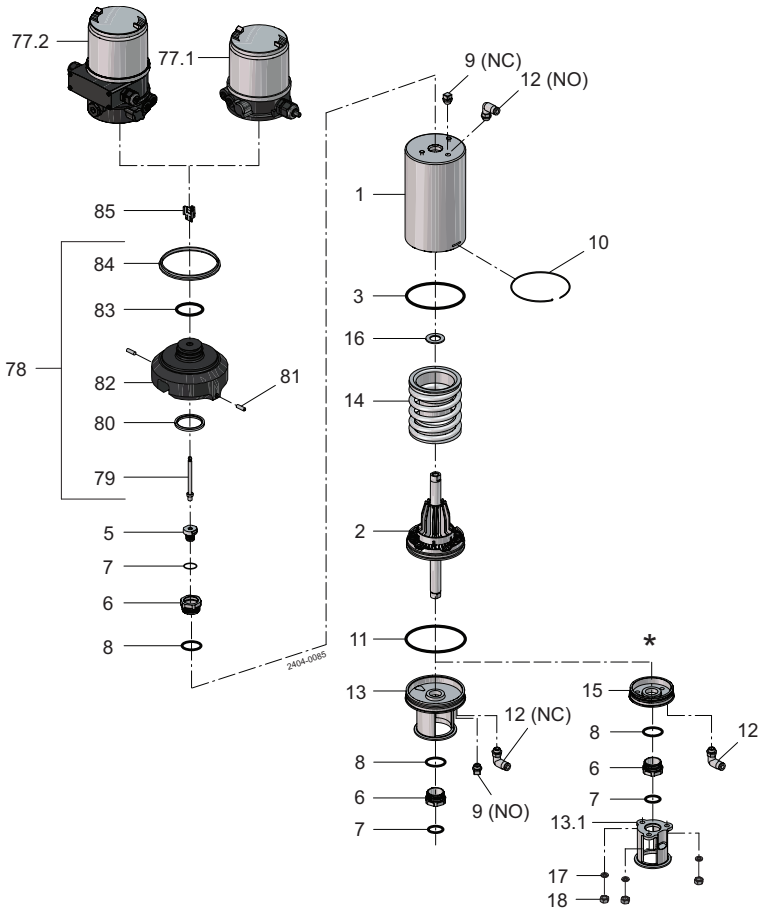

Pos.	Qty.	Denomination
		Actuator
1	1	Cylinder
2	1	Piston
3	1	O-ring
6	2	Bushing
7	2	O-ring
8	2	O-ring
9	1	Plug
10	1	Lock wire
11	1	O-ring
12	1	Air fitting
13	1	Yoke without bolts (0616 -)
13.1	1	Yoke (- 0616)
14	1	Spring assembly
15	1	Bottom (- 0616)

Pos.	Qty.	Denomination
16	1	Support disc
17	3	Washer (- 0616)
18	3	Nut (- 0616)
76	1	Positioner 8694
77.1	1	Positioner 8694 without display
77.2	1	Positioner 8694 without display - US
78	1	Adapter, cpl. (incl. pos. 79 to 84)
79	1	Spindle
80	1	Special X-ring
81	2	Allen screw
82	1	Adapter
83	1	O-ring
84	1	Gasket for adapter
85	1	Puck sensorpad, cpl.

9.4 Maintainable actuator (sizes 63,5 mm-101,6 mm / DN65-DN100)

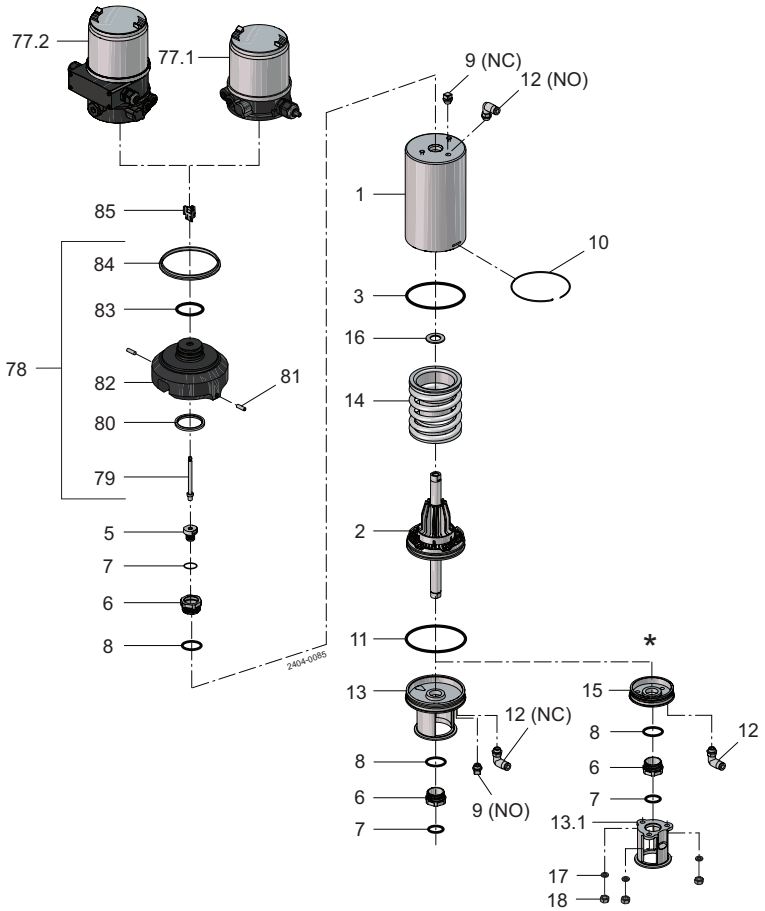

Pos.	Qty.	Denomination
		Actuator
1	1	Cylinder
2	1	Piston
3	1	O-ring
6	2	Bushing
7	2	O-ring
8	2	O-ring
9	1	Plug
10	1	Lock wire
11	1	O-ring
12	1	Air fitting
13	1	Yoke without bolts (0616 -)
13.1	1	Yoke (- 0616)
14	1	Spring assembly

Pos.	Qty.	Denomination
15	1	Bottom (- 0616)
16	1	Support disc
18	3	Nut (- 0616)
76	1	Positioner 8694
77.1	1	Positioner 8694 without display
77.2	1	Positioner 8694 without display - US
78	1	Adapter, cpl. (incl. pos. 79 to 84)
79	1	Spindle
80	1	Special X-ring
81	2	Allen screw
82	1	Adapter
83	1	O-ring
84	1	Gasket for adapter
85	1	Puck sensorpad, cpl.