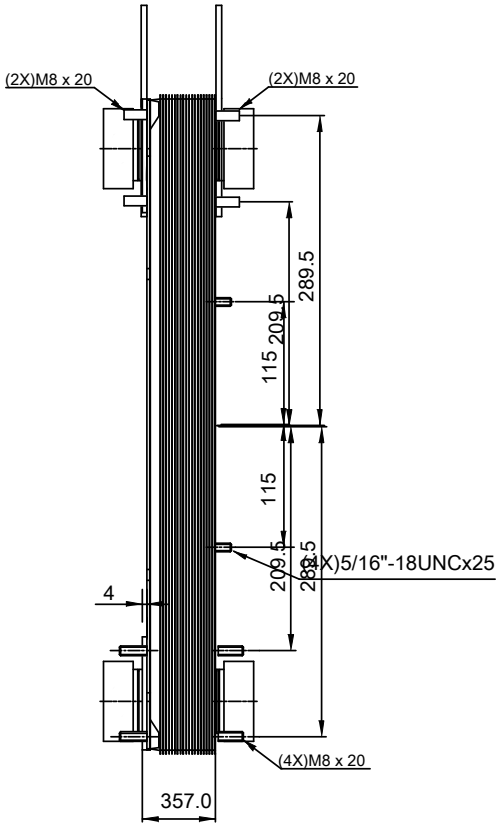

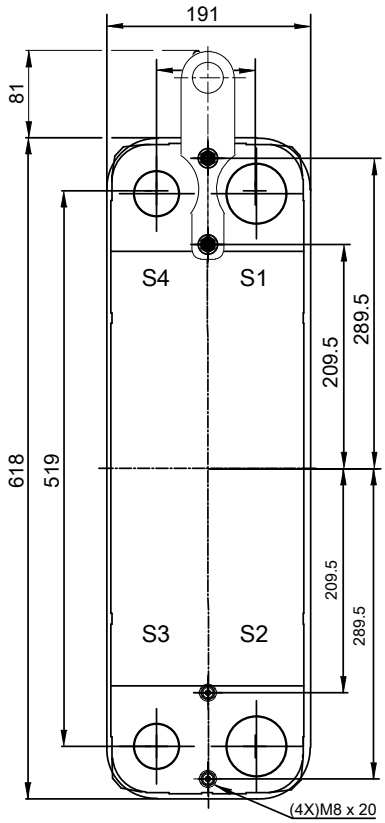

T1 T2 T3 T4 locations on back side
correspond to S1 S2 S3 S4 on front side

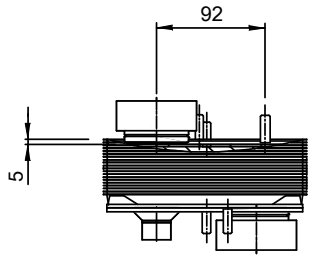

Z80
Alloy 316
S3,S4

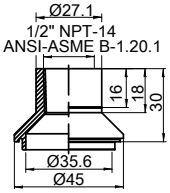

Z 25
Carbon Steel
S1,S2,T3,T4

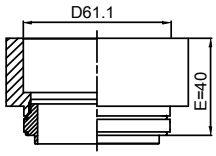

HEATING SURFACE	
NETWEIGHT	67.4 kg
OPERATING WEIGHT	kg
PLATE MATERIAL	ALLOY 316
PLATE GROUPING	1*59H/1*60H

ALL DIMENSIONS IN MILLIMETERS

Note that all unique customer requirements (i.e tolerance) need to be verified thru Alfa Laval.

SIDE	MEDIA	INLET	TEMP.	OUTLET	TEMP.	FLOW RATE	PRESSURE DROP	LIQUID VOL.
1		S1		S2				15.0 dm³
2		S3		S4				14.8 dm³

PRESSURE VESSEL APPROVAL ASME 302 degr F/CRN

AlfaNova HP 76-120H (3287131351)

www.alfalaval.com

CUSTOMER NAME / REF. NO.

COMPANY / REF.

TOTAL LENGTH	428.0 mm
TOTAL WIDTH	191.0 mm
TOTAL HEIGHT	699.0 mm

4/16/2024
REV 0