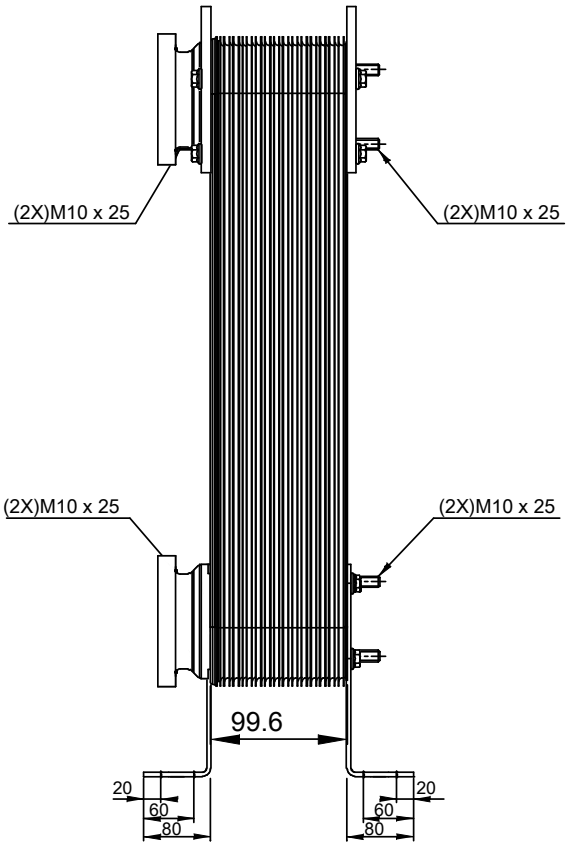

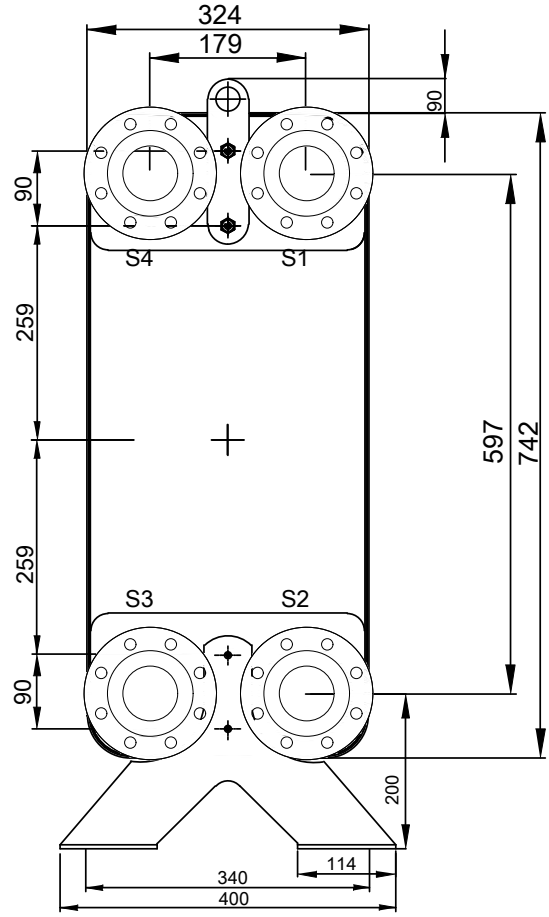

T1 T2 T3 T4 locations on back side
correspond to S1 S2 S3 S4 on front side

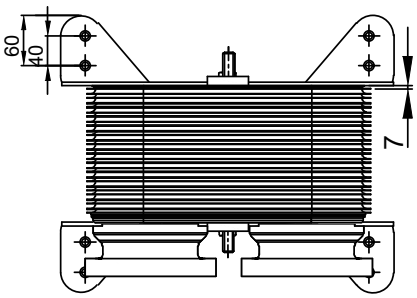

Note that all unique customer requirements (i.e tolerance) need to be verified thru Alfa Laval.

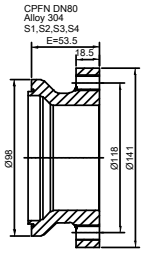

HEATING SURFACE
NETWEIGHT 49.1 kg
OPERATING WEIGHT kg
PLATE MATERIAL ALLOY 316

PLATE GROUPING 1*19AMH/1*20AML

ALL DIMENSIONS IN MILLIMETERS

SIDE	MEDIA	INLET	TEMP.	OUTLET	TEMP.	FLOW RATE	PRESSURE DROP	LIQUID VOL.
1		S1		S2				12.7 dm³
2		S3		S4				7.90 dm³

PRESSURE VESSEL APPROVAL PED/UK

CBH210-40AM-F (3075044148)

www.alfalaval.com

CUSTOMER NAME / REF. NO.

COMPANY / REF.

TOTAL LENGTH	259.6 mm
TOTAL WIDTH	324.0 mm
TOTAL HEIGHT	959.0 mm

4/16/2024
REV 0