PlusClean® - PlusClean® UltraPure

Wall mounted cleaning devices

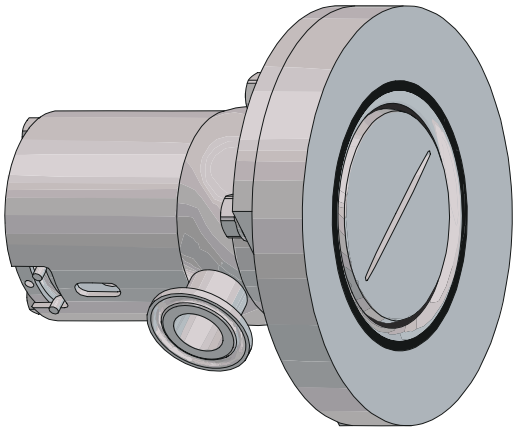

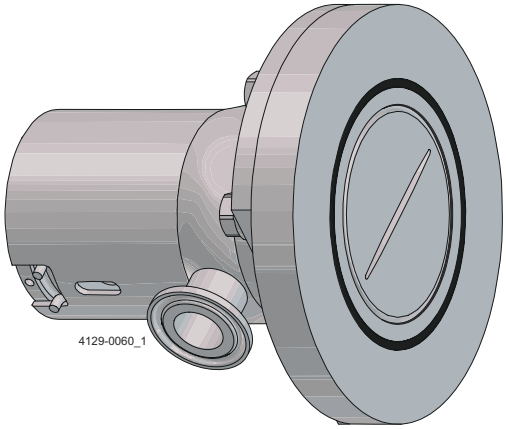

Lit. Code 200009288-4-EN-GB

Instruction manual

BRITISH ENGLISH

Published by
Alfa Laval Kolding A/S
Albuen 31
DK-6000 Kolding, Denmark
+45 79 32 22 00

The original instructions are in English

© Alfa Laval AB 2025-08

This document and its contents are subject to copyrights and other intellectual property rights owned by Alfa Laval AB (publ) or any of its affiliates (jointly “Alfa Laval”). No part of this document may be copied, re-produced or transmitted in any form or by any means, or for any purpose, without Alfa Laval’s prior express written permission. Information and services provided in this document are made as a benefit and service to the user, and no representations or warranties are made about the accuracy or suitability of this information and these services for any purpose. All rights are reserved.

Contents

1 Declarations of Conformity 7
1.1 EU Declaration of Conformity 7
1.2 UK Declaration of Conformity 8

2 Safety 9
2.1 Safety Signs 10
2.2 Safety Precautions 12
2.3 Warning Signs in Text 17
2.4 Requirements of Personnel 18
2.5 Recycling Information 19
2.6 How to Contact Alfa Laval 20

3 Introduction 21
3.1 General Description 21
3.1.1 Intended Use 23
3.1.2 Working Principle 24
3.1.3 Design Principle 24
3.2 Patents and Trademarks 25
3.3 Quality System 25
3.4 Marking 26
3.5 ATEX/UKEx/IECEx Marking 27
3.6 ATEX/UKEx/IECEx Temperature Class and Code 28

4 Installation 29
4.1 Unpacking/Delivery 29
4.2 General Installation 30
4.2.1 Installation Orientation 31
4.2.2 Process Setup Recommendation 31
4.2.3 Strainer Recommendations 31
4.2.4 Draining 32
4.2.5 Welding Recommendation 33
4.2.6 Attachment to Supply Line 33
4.2.7 Installation of Externally Mounted Tank Cleaning Devices 34
4.2.7.1 Mounting 34
4.2.7.2 Orientation of Spray 36
4.3 Specific conditions for safe use in accordance with ATEX/UKEx/IECEx certification 38

5 Operation 41
5.1 Normal Operation 42
5.1.1 Media Driven 42

5.1.2 Pneumatic Driven....43
5.2 Recommended Cleaning....44
5.3 Troubleshooting....45

6 Maintenance....47
6.1 Preventive Maintenance....47
6.2 Service and Repair of ATEX/UKEX/IECEx Certified Machines....49
6.3 Recommended Service Intervals....50
6.4 Dismantling....51
6.4.1 Uninstall for Maintenance....51
6.4.2 Disassembly....51
6.4.2.1 Disassembly of Pneumatic Actuator....52
6.4.2.2 Disassembly of Alfa Laval PlusClean®....54
6.5 Assembly....59
6.5.1 Assembly of Pneumatic Actuator....59

7 Technical Data....63
7.1 Alfa Laval PlusClean® Media Driven....63
7.1.1 Technical Data....63
7.1.2 Physical Data....63
7.1.3 Dimensions....64
7.1.4 Performance Data....65
7.1.4.1 Flow Rate....65
7.1.4.2 Throw Length....66
7.2 Alfa Laval PlusClean® Pneumatic Driven....67
7.2.1 Technical Data....67
7.2.2 Physical Data....67
7.2.3 Dimensions....68
7.2.4 Performance Data....69
7.2.4.1 Flow Rate....69
7.2.4.2 Throw Length....70

8 Product Programme....71
8.1 Qualification Documentation....71
8.2 Accessories....72
8.2.1 Weld Plates....72
8.2.1.1 Specification of Pressure Weld Plates According to PED 2014/68/EU....72
8.2.1.2 Specification of Pressure Weld Plates According to ASME VIII div. 1 and div. 2....73
8.2.2 Sensor and Control Units....73

9 Spare Parts....75

9.1 Ordering Spare Parts....75
9.2 Alfa Laval Service....75
9.3 Warranty - Definition....76

10 Parts Lists and Exploded Views....77
10.1 Media Driven....77
10.2 Pneumatic Driven....78
10.3 Accessories and Tools....79

11 Appendix....81
11.1 Weld Plate Installation....81

This page is intentionally left blank.

1 Declarations of Conformity

1.1 EU Declaration of Conformity

The designated company

Alfa Laval Kolding A/S, Albuen 31, DK-6000 Kolding, Denmark, +45 79 32 22 00

Company name, address and phone number

Hereby declare that

Wall Mounted Cleaning Device

Designation

PlusClean, PlusClean UP

Type

is in conformity with the following directives with amendments:

- Machinery Directive 2006/42/EC
- ATEX Directive 2014/34/EU and the following harmonized standards are used: *EN ISO 80079-36:2016, EN ISO 80079-37:2016, DS/EN ISO/IEC 80079-34:2011, Annex A, paragraph A.5.3 Rotating machines*

EC Type Examination Certificate number SGS25ATEX0039X.

Marking: II 1G/- Ex h IIC 85°C…188°C Ga/-
II 1D/- Ex h IIIC T85°C…T140°C Da/-

The QAN (Quality Assurance Notification) is carried out by SGS Fimko Oy, Särkiniementie 3, Helsinki 00211, Finland. Notified Body No. 0598. EU Type Examination Certification is carried out by SGS Fimko Oy, Särkiniementie 3, Helsinki 00211, Finland. Notified Body no. 0598. IECEx Certificate of Conformity is carried out by Baseefa Ltd., Rockhead Business Park, Staden Lane, Buxton, Derbyshire SK17 9RZ, United Kingdom.

The person authorised to compile the technical file is the signer of this document.

Title	Name
Vice President BU Hygienic Fluid Handling Head of Product Management	Mikkel Nordkvist

Place	Date (YYYY-MM-DD)	Signature
Kolding, Denmark	2025–06–01	Mikkel Nordkvist

DoC Revison_ 02_062025

1.2 UK Declaration of Conformity

The designated company

Alfa Laval Kolding A/S, Albuen 31, DK-6000 Kolding, Denmark, +45 79 32 22 00

Company name, address and phone number

Hereby declare that

Wall Mounted Cleaning Device

Designation

PlusClean, PlusClean UP

Type

is in conformity with the following directives with amendments:

- The Supply of Machinery (Safety) Regulations 2008
- The Equipment and Protective Systems Intended for use in Potentially Explosive Atmospheres Regulations 2016 and the following harmonized standards are used: *EN ISO 80079-36:2016, EN ISO 80079-37:2016, DS/EN ISO/IEC 80079-34:2011, Annex A, paragraph A.5.3 Rotating machines*

UKEx Type Examination Certificate number SGS25UKEX0040X.

Marking: II 1G/- Ex h IIC 85°C…188°C Ga/-
II 1D/- Ex h IIIC T85°C…T140°C Da/-

Signed on behalf of: Alfa Laval Kolding A/S.

Title	Name
Vice President BU Hygienic Fluid Handling Head of Product Management	Mikkel Nordkvist

Place	Date (YYYY-MM-DD)	Signature
Kolding, Denmark	2025–06–01	

DoC Revison_ 03_062025

2 Safety

Read this first

	This Instruction Manual is designed for operators and service engineers working with the supplied Alfa Laval product. Operators must read and understand the ***Safety, Installation and Operating*** instructions of the supplied Alfa Laval product before carrying out any work or before you put the supplied Alfa Laval product into service! Not following the instructions can result in serious accidents. This documentation describes the authorized way to use the supplied Alfa Laval product. Alfa Laval will take no responsibility for injury or damage if the equipment is used in any other way. This Instruction Manual is designed to provide the user with the information to perform tasks safely for all phases in the lifetime of the supplied Alfa Laval product. The operator shall always read the chapter ***Safety*** first. Hereafter the operator can skip to the relevant section for the task to be carried out or for the information needed. **Always** read the chapter ***Technical Data*** thoroughly. This is the complete Instruction Manual for the supplied Alfa Laval product.

NOTE

The illustrations and specifications in this Instruction Manual were effective at the date of printing. However, as continuous improvements are our policy, we reserve the right to alter or modify the Instruction Manual without prior notice or any obligation.

The English version of the Instruction Manual is the original manual. Alfa Laval cannot be held responsible for incorrect translations. In case of doubt, the English version applies.

2.1 Safety Signs

Mandatory Action Signs

	General mandatory action sign.
	Refer to Instruction Manual.
	Use eye protection - safety glasses.
	Use protective hand wear - safety gloves.
	Wear protective equipment - safety helmet.
	Use ear protection in noisy environments - noise protector.
	Wear protective equipment - safety shoes.

Warning Signs

	General warning.
	Corrosive substance.
	Hot surface and burning danger.
	Cutting danger.
	Heavy object lifting.

	Transportation with forklift truck or other industrial vehicles if heavy.
	Electricity.
	Danger of injury (lasermarked on the actuator). Do **not** attempt to disassemble the actuator due to spring under load danger! (The lock wire opening is blocked).
	Danger of injury (lasermarked on the actuator). Do **not** attempt to cut open actuator due to spring under load danger! (The lock wire opening is blocked).
	Danger of injury (laser marked on actuator). Do **not** attempt to cut the actuator open due to spring under load (the lock wire opening is blocked).
	ATEX/UKEx/IECEx warning.

2.2 Safety Precautions

All warnings in the Instruction Manual are summarised in this section. Pay special attention to the instructions below so that severe personal injury and/or damage to the supplied Alfa Laval product is avoided.

Transportation and Lifting

	Always ensure that personnel must have experience with lifting operations. **Always** ensure that the personnel use the correct protective equipment.
	Always ensure that compressed air is released.
	Always ensure that all connections are disconnected before attempting to remove the machine from the installation.
	Always use predesigned lifting points if defined. Ensure that the lifting equipment is suitable for the machine. **Always** ensure the lifting point to be in line with centre of gravity. Adjust lifting point if necessary. **Always** use appropriate lifting equipment for heavy parts when relevant. Use lifting logs when available.
	Always keep an eye on the load and stay clear during the lifting operation.
	Always drain liquid out of the machine before transportation.
	Always ensure sufficient fixing of the machine during transportation - if specially designed packaging material is available, it must be used.
	Always use original packaging or similar during transportation.

Installation

	Always follow this Instruction Manual thoroughly. Before installing the machine and setting it into operation carefully read *Safety* on page 9, *General Installation* on page 30 and *Operation* on page 41.
	Ensure that the machine is compatible with the product and CIP media.
	Never dismantle or touch the machine or pipelines when processing hot fluids or when sterilising.
	Ensure that the tank being cleaned does not contain a combustible liquid or vapor having a risk of ignition or explosion. Any tank cleaning machine can develop a static electricity charge while in operation.
	Always ensure all pipelines (product, air, and water) are depressurized and emptied before installation, inspection, assembling and disassembling. **Always** assemble the machine completely before start and make sure everything is in place and properly tightened.
	Always release compressed air after use.
	Never work on the machine or touch moving parts if the actuator is supplied with compressed air.
	Do **NOT** attempt to disassemble the actuator due to spring under load danger! Do **NOT** attempt to cut the actuator open due to spring under load.
	Before installing the machine and setting it into operation, carefully read *Safety* on page 9 and *General Installation* on page 30, including *Specific conditions for safe use in accordance with ATEX/UKEx/IECEx certification* on page 38 and take all necessary precautions according to your application and local regulations.
	Ensure that the tank cleaning device is properly grounded if the tank being cleaned contains a combustible liquid or vapor having a risk of ignition or explosion. Any tank cleaning device can develop a static electricity charge while in operation.

Operation

	Always follow this Instruction Manual thoroughly. Before installing the machine and setting it into operation carefully read *Safety* on page 9, *General Installation* on page 30 and *Operation* on page 41.
	Ensure that the machine is compatible with the product and CIP media. **Always** take necessary precautions if leakage occurs as this can lead to hazardous situations. If the liquid or vapor is hot, corrosive, or toxic, a leak would present a serious hazard to any personnel in the immediate vicinity or to any exposed electrical equipment. **Always** rinse well with clean water after cleaning. **Always** handle lye and acid with great care. **Always** follow the instructions in the safety data sheets from the suppliers of cleaning agents, detergents, oils etc.
	Never operate the machine unless it is properly mounted or installed.
	Never dismantle or touch the machine or pipelines when processing hot fluids or when sterilising.
	Ensure every tank opening is covered before operating the tank cleaning device. These covers should be sealed well enough to withstand the full force of the liquid hitting the covers.
	Always release compressed air after use.
	Never work on the machine or touch moving parts if the actuator is supplied with compressed air.
	CAUTION Do **not** operate pneumatic actuator with cleaning media pressure on.
	Before installing the machine and setting it into operation, carefully read *Safety* on page 9 and *General Installation* on page 30, including *Specific conditions for safe use in accordance with ATEX/UKEx/IECEx certification* on page 38 and take all necessary precautions according to your application and local regulations.

Maintenance

	Always follow this Instruction Manual thoroughly. Before maintaining the machine, carefully read *Maintenance* on page 47.
	Always rinse well with clean water prior to maintenance.
	Always ensure all pipelines (product, air, and water) are depressurized and emptied before installation, inspection, assembling and disassembling. **Always** assemble the machine completely before start and make sure everything is in place and properly tightened.
	Never dismantle or touch the machine or pipelines when processing hot liquids or when sterilising.
	Always release compressed air after use.
	Never work on the machine or touch moving parts if the actuator is supplied with compressed air.
	Do **NOT** attempt to disassemble the actuator due to spring under load danger! Do **NOT** attempt to cut the actuator open due to spring under load.
	Do **NOT** perform maintenance or repairs in an area where explosive atmospheres are present.

Storage

	Alfa Laval recommends: • Store the supplied Alfa Laval product as supplied in original packaging • Port opening(s) should be protected against ingress • Bare steel (not stainless) should be lightly oiled/greased • Store in a clean, dry place without direct sunlight or UV light • Temperature range -5° C to +40° C (23° F - 104° F) • Relative humidity less than 60% • No exposure to corrosive substances (including contained air) • Rinse supplied Alfa Laval product with clean water before storage

Noise

	One meter from and 1.6 meter above the exhaust, the noise level of an actuator is approximately 77 dB(A) without noise damper and approximately 72 dB(A) with damper – measured at 7 bar air-pressure.

Hazards

	Burn Hazard Various surfaces of the supplied Alfa Laval product and CIP supply line can be hot and cause burns. Wear protective gloves.

	Corrosive Hazard **Always** handle cleaning liquids (e.g., lye and acid) with great care and in accordance with separate instructions for those fluids. **Always** follow the general rules and recommendations regarding ventilation, personnel protection etc. when using chemical cleaning agents and lubricants.

	Cut Hazard • Avoid placing hands into valve orifice pinch points

Safety check

	A visual inspection of any protective device (shield, guard, cover or other) on the supplied Alfa Laval product shall be carried out at least every 12 months. If the protective device is lost or damaged, especially when this leads to deterioration of safety performance, it shall be replaced. The fixing of the protective device should only be replaced with fixings of the same or an equivalent type. **Inspection acceptance criteria:** • It should not be possible to reach moving parts originally protected by a protective device • The protective device must be securely mounted • Ensure that screws for the protective device are securely tightened **Procedure in case of non-acceptance:** • Fix and/or replace the protective device

2.3 Warning Signs in Text

Pay attention to the safety instructions in this Instruction Manual.

Below are definitions of the four grades of warning signs used in the text where there is a risk for injury to personnel or damage to the supplied Alfa Laval product.

DANGER

Indicates an imminently hazardous situation which, if not avoided, will result in death or serious injury.

WARNING

Indicates a potentially hazardous situation which, if not avoided, could result in death or serious injury.

CAUTION

Indicates a potentially hazardous situation which, if not avoided, may result in minor or moderate damage to the supplied Alfa Laval product.

NOTE

Indicates important information to simplify or clarify procedures.

2.4 Requirements of Personnel

Operators

The operators shall read and understand this Instruction Manual.

Maintenance personnel

The maintenance personnel shall read and understand this Instruction Manual. The maintenance personnel or technicians shall be skilled within the field required to carry out the maintenance work safely.

Trainees

Trainees can perform tasks under the supervision of an experienced employee.

People in general

The public shall not have access to the supplied Alfa Laval product.

In some cases, specially skilled personnel may need to be hired (i.e. electricians, welders). In some cases the personnel has to be certified according to local regulations with experience of similar types of work.

2.5 Recycling Information

Unpacking

Packing material may consist of wood, plastics, cardboard boxes and in some cases metal straps.

	• Wood and cardboard boxes can be reused, recycled or used for energy recovery • Plastics should be recycled or burnt at a licensed waste incineration plant • Metal straps should be sent for material recycling

WARNING

If the actuator is marked with one of the below warnings, due caution is needed during disassembly.

The spring inside is under load – any type of breakage of the actuator can lead to injury!

Maintenance

During maintenance, oil (if used) and wear parts in the supplied Alfa Laval product should be replaced.

- Oil and all non-metal wear parts must be disposed of in accordance with local regulations
- Rubber and plastics should be burnt at a licensed waste incineration plant. If not available they should be disposed of in accordance with local regulations
- Bearings and other metal parts should be sent to a licensed handler for material recycling
- Seal rings and friction linings should be disposed of to a licensed land fill site. Check your local regulations
- All metal parts should be sent for material recycling
- Worn out or defected electronic parts should be sent to a licensed handler for material recycling

Scrapping

At end of use, the equipment must be recycled in accordance with the relevant local regulations. Besides the equipment itself, any hazardous residues from the process liquid must be considered and dealt with in a proper manner. When in doubt, or in the absence of local regulations, please contact your local Alfa Laval sales company.

2.6 How to Contact Alfa Laval

Contact details for all countries are continually updated on our website.

Please visit *www.alfalaval.com* to access the information directly.

3 Introduction

Alfa Laval PlusClean® and Alfa Laval PlusClean® UltraPure are wall mounted cleaning nozzles designed for cleaning of shadow areas in tanks; e.g. below agitator blades and other tank internals. PlusClean and PlusClean UltraPure are smoothly integrated into the tank wall. When activated during Cleaning-in-Place (CIP), PlusClean and PlusClean UltraPure cover cleaning shadow areas with a high impact fan of cleaning media, giving the market's first guarantee of 100% impact cleaning coverage.

Alfa Laval PlusClean® is versatile, with applications spanning hygiene-critical industries such as food, beverage, dairy, and pharmaceuticals. It is also suitable for personal care, home care, and other less hygiene-critical applications.

Alfa Laval PlusClean® UltraPure is specifically designed to meet the stringent sterile and aseptic process requirements of the biotechnology and pharmaceutical industries. It comes with the comprehensive Alfa Laval Q-doc documentation package, ensuring full compliance and traceability.

3.1 General Description

This Instruction Manual has been prepared as a guide for installing, operating, and maintaining the supplied Alfa Laval product. Should you require further assistance, Alfa Laval Technical Sales Support department and worldwide network of sales offices are pleased to help you. Please quote the type, article, and serial numbers with all your enquiries; this helps us to help you.

Refer to *Marking* on page 26 for placement of type and serial number.

Preventive maintenance gives the best and most economical performance from the supplied Alfa Laval product. For maintenance recommendation see *Maintenance* on page 47.

NOTE

If the supplied Alfa Laval product stops working unintentionally within the warranty period, please contact Alfa Laval Technical Sales Support department or worldwide network of sales offices. Please do not try to fix any mechanical problems on your own.

The Alfa Laval ThinkTop range can be mounted on the machine as a sensor and/or for control purposes. See *Accessories* on page 72.

The drawing indicates the main components of the supplied Alfa Laval product.

A: Tank connection

B: Inlet connection for cleaning media: 3/4" Clamp

C: Alfa Laval PlusClean®

D: Pneumatic Actuator

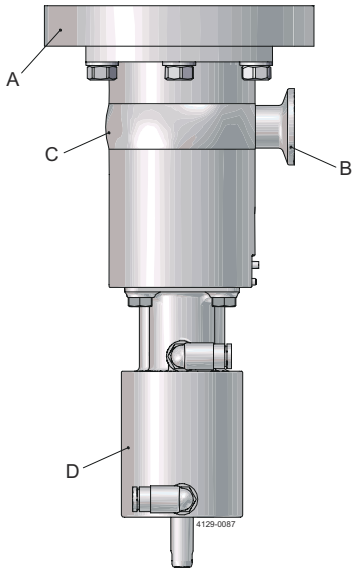

3.1.1 Intended Use

For the purpose of this Instruction Manual, tanks are defined as any compartment e.g., vessels, containers, semi-closed equipment ducts.

The end-user should verify:

- that the tank cleaning device is in conformity with respect to tank size in which it is used
- that the construction materials (both metallic and nonmetallic) are compatibility with product, flushing media, cleaning media, temperatures, and pressure under the intended use

The tank cleaning device is intended for use in closed tanks. If used in open environment see instructions in *Safety* on page 9 and *General Installation* on page 30.

The wetted parts of the machine (see *ATEX/UKEx/IECEx Marking* on page 27) can be used in explosive hazard zones (ATEX/UKEx/IECEx), provided it is installed according to safety instructions in local regulations.

The wall mounted cleaning device is designed for tanks and process equipment with moving internals, and processes where permanently installed tank cleaning devices may have an undesired influence on the process or product. For larger tanks, multiple wall mounted cleaning devices may be applied.

3.1.2 Working Principle

Alfa Laval PlusClean® operates by moving a piston through a built-in spring actuator powered by media, which typically refers to cleaning liquid but is not necessarily limited to that. The spring is positioned outside the product contact area.

Alfa Laval PlusClean® is a sanitary tank cleaning device of the stationary fan type for permanent installation. The installation forms a flush design with the tank wall. It provides a 22 - 72 degrees cleaning pattern.

Spray pattern

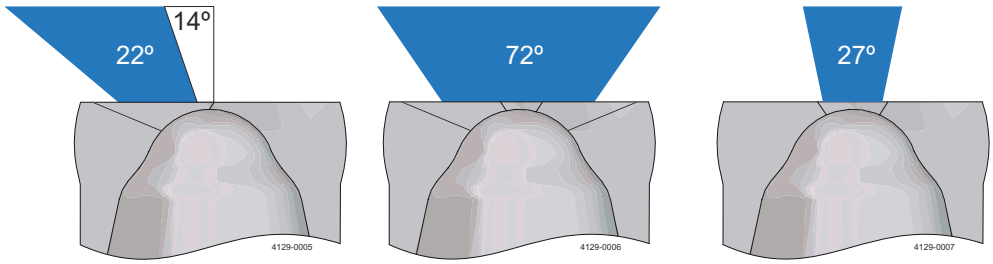

The spray pattern can be orientated towards specific surfaces as described in *Installation of Externally Mounted Tank Cleaning Devices* on page 34.

The cleaning media enters the body through the inlet connection. The liquid pushes the piston, which retracts to the open position by compressing the spring mechanism. At the same time the cleaning media passes through the body and out through the slot opening. When cleaning is completed and the force from the cleaning media pressure drops below the spring force, the piston is restored by the integrated spring mechanism.

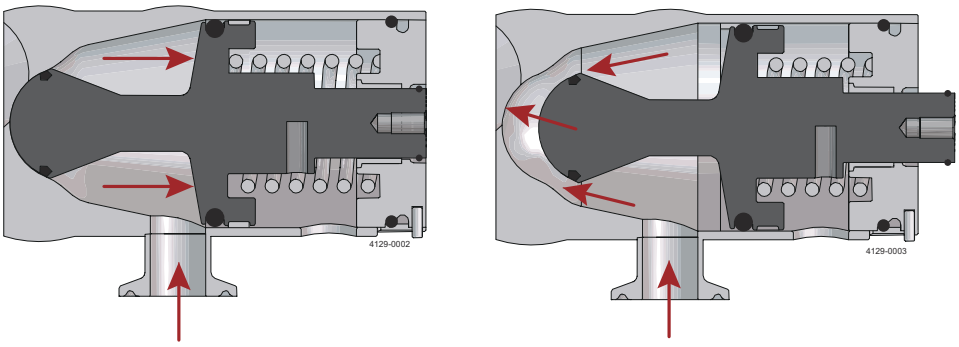

In the closed position, the O-ring on the piston seals against the inside of the body of the Alfa Laval PlusClean®, preventing liquid from the tank from entering.

Application assistance and optimal position recommendation is available by contacting Alfa Laval Technical Sales Support department or worldwide network of sales offices.

3.1.3 Design Principle

The supplied Alfa Laval product is designed in accordance with the 3-A Sanitary Standards No. 78-04 as well as the guidelines of the European Hygienic Design Group (EHEDG) wherever feasible and thus complies with requirements to design, materials, surface finish and documentation.

The machine is completely self-cleaning except for the part of the plug facing towards the product. This surface is normally cleaned by a second tank cleaning device. When properly installed the machine is self-draining, see *Draining* on page 32.

- All permanent assemblies are fully welded
- No threads have been used in the product and cleaning media contact area
- Gaskets and seals are exposed to cleaning liquid

The product contact surface materials are (for specific information see *Technical Data* on page 63):

- Metals: AISI 316 stainless steel (or better corrosion vice)
- Elastomers: complies with relevant food contact legislation (e.g., FDA, EU regulation) and pharma standards (e.g., USP 87, USP 88 Class VI, ISO 10993). For further details see Alfa Laval Anytime for specific Parts ID's
- Polymers: complies with relevant food legislation (e.g., FDA, EU 10/2011) and pharma standards (e.g., USP 87, USP 88 Class VI, ISO 10993). For further details see Alfa Laval Anytime for specific Parts ID's

The tank cleaning device is lubricated by the cleaning media. Food grade lubricants are used on the O-ring that seals the CIP liquid area from the non-liquid area.

3.2 Patents and Trademarks

This Instruction Manual is published by Alfa Laval Kolding A/S without any warranty. Improvements and changes may at any time be made by Alfa Laval Kolding A/S without prior notice. Such changes are incorporated in new editions.

Alfa Laval Kolding A/S. All rights reserved.

The Alfa Laval logotype is a trademark or a registered trademark of Alfa Laval Corporate AB.

Other products or company names mentioned herein may be the trademarks of their respective owners. Any rights not expressly granted herein are reserved.

3.3 Quality System

The supplied Alfa Laval product is produced according to Alfa Laval Kolding´s ISO 9001 international standard certified quality system.

3.4 Marking

Alfa Laval tank cleaning devices are marked to allow for recognition of machine designation, machine type, serial number and manufacturing address.

The marking is placed on the tank cleaning device as shown below.

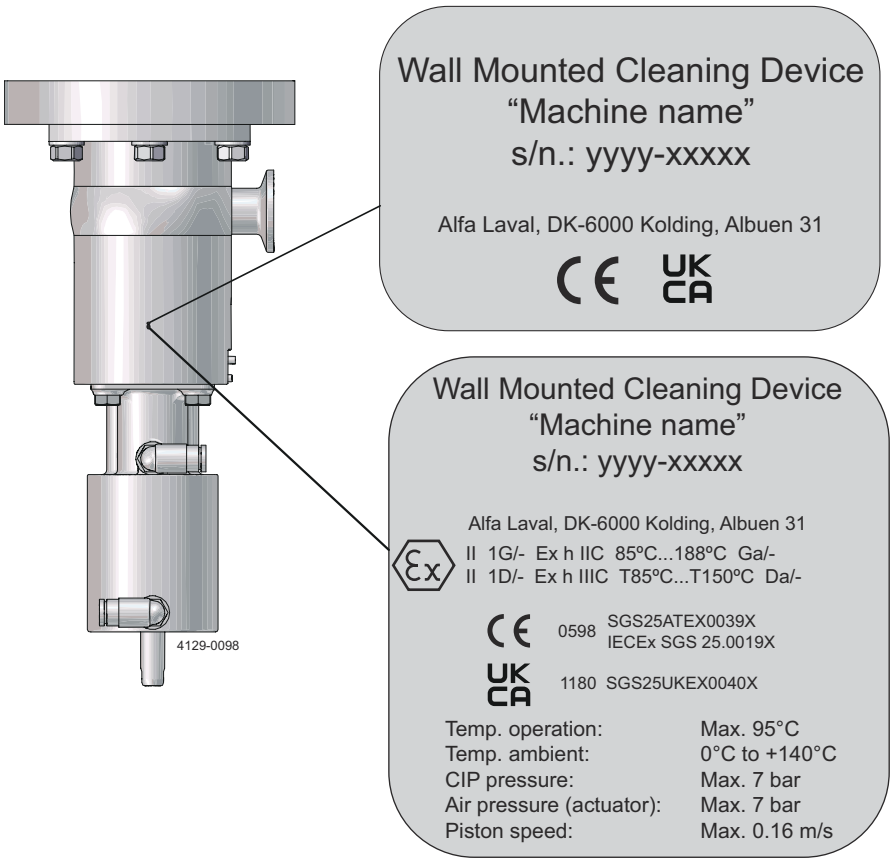

Serial number explanation

Machines supplied with standard documentation:

yyyy-xxxxx: serial number

yyyy: year

xxxxx: 5 digit sequential number

3.5 ATEX/UKEx/IECEx Marking

The PlusClean® - PlusClean® UltraPure are certified as category I components. The ATEX certification is carried out by the Notified Body SGS Fimko Oy, who has issued the certificate number SGS25ATEX0039X.

The IECEx certification is carried out by the Certification Body SGS Baseefa Ltd., who has issued the certificate number IECEx SGS 25.0019X.

The UKEx certification is carried out by the Certification Body SGS Baseefa Ltd., who has issued the certificate number SGS25UKEX0040X.

NOTE **Explosion protection type**

Explosion protection type is constructional safety “c”.

The marking on the ATEX/UKEx/IECEx certified PlusClean® - PlusClean® UltraPure is shown in *Marking* on page 26).

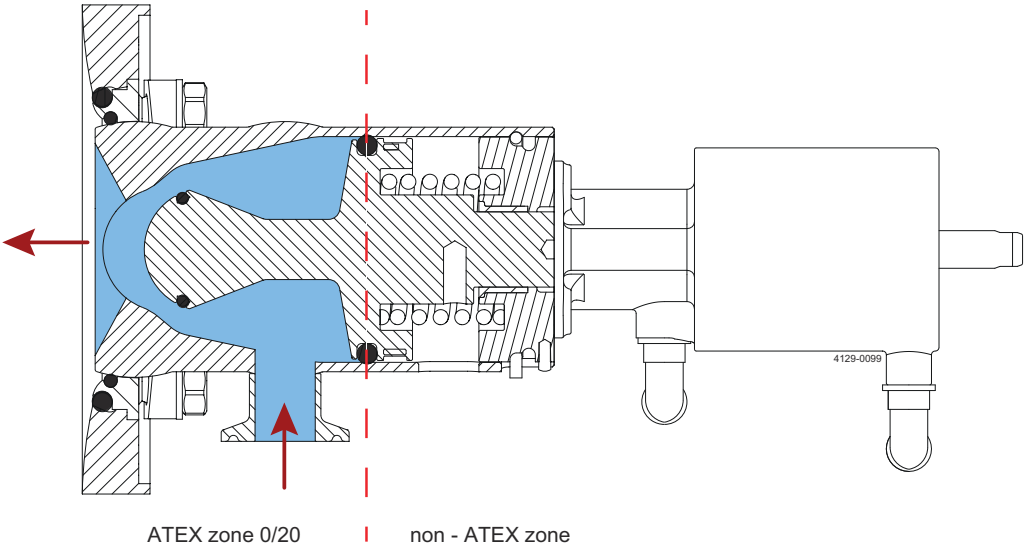

3.6 ATEX/UKEx/IECEx Temperature Class and Code

The maximum surface temperature depends mainly on operating conditions which are the temperature of the cleaning fluid or the ambient temperature.

Group III EPL Ga

The gas temperature class is corrected with a safety margin of 80% due to a requirement for Group II EPL Ga equipment.

The gas temperature class depends on the cleaning fluid temperature or the ambient temperature, whichever of the two is the highest.

Table for determining temperature class (gas atmospheres)		
Gas Temperature class	**Cleaning fluid temperature T_p (°C)**	**Ambient temperature In operation T_{amb} (°C)**
85 °C (T6)	0 <= T_P<=+68	0 <= T_{amb}<=+68
100 °C (T5)	+68 <= T_P<=+80	+68 <= T_{amb}<=+80
135 °C (T4)	+80 <= T_P<=+95	+80 <= T_{amb}<=+95

Group III EPL Da

The dust temperature class depends on the cleaning fluid temperature or the ambient temperature, whichever of the two is the highest.

No dust layer is considered.

Table for determining temperature class (dust atmospheres)		
Dust Temperature code	**Cleaning fluid temperature T_p (°C)**	**Ambient temperature In operation T_{amb} (°C)**
T85 °C	0 <= T_P<=+85	0 <= T_{amb}<=+85
T100 °C	+85 <= T_P<=+95	+85 <= T_{amb}<=+95

Example of gas class determination

Cleaning fluid temperature is 67 °C and ambient temperature is 75 °C.

Gas class = T5

ATEX/UKEx/IECEx marking on the equipment:

II 1G/- Ex h IIC 85°C…188°C Ga/-

II 1D/- Ex h IIIC T85°C…T140°C Da/-

4 Installation

Every machine is operationally tested before shipment and is ready to run after unpacking. No assembly is required prior to use. Any change to the operating conditions provided in this Instruction Manual affects the performance of the machine.

4.1 Unpacking/Delivery

NOTE

Alfa Laval cannot be held responsible for incorrect unpacking.

Always read *Safety Precautions* on page 12.

Always read *Technical Data* on page 63.

WARNING **Air supply**

Always connect air supply hose to push-in fitting. Make sure that the air supply hose is fitted properly. To reduce risk of whiplash, fasten air supply hose to other supply lines as close to the push-in fitting as practically possible.

Unpacking and initial inspection

- Check delivery note
- Remove packing material from the machine
- Inspect the machine for visible transport damage
- Avoid damaging the machine

During handling and installation, handle the machine with care to not damage the surface finish of the machine.

The machine has been tested at the factory before shipping in accordance with the Test Specifications.

If the supplied Alfa Laval product is purchased with an actuator, you can assess the machine's operating condition.

1. Supply compressed air to the actuator.
2. Open and close the valve several times to ensure it operates smoothly.

4.2 General Installation

NOTE

Alfa Laval cannot be held responsible for incorrect installation.

Always read *Safety Precautions* on page 12.

Always read *Technical Data* on page 63.

Always release compressed air after use.

Always thoroughly flush all supply lines and machines before installation to remove remains from welding, grinding, scale and other foreign matter.

Always install the machine in accordance with national regulations for safety and other relevant regulations and standards. In EU-countries the complete system must fulfil the EU-Machinery Directive and depending on application, the EU-Pressure Equipment Directive, the EU-ATEX/UKEx/IECEx Directive and other relevant Directives and shall be CE-marked before it is set into operation.

For information on use in potential explosive atmospheres see *Specific conditions for safe use in accordance with ATEX/UKEx/IECEx certification* on page 38.

WARNING **Prevent startup**

Precaution shall be made to prevent starting the cleaning operation, while personnel are inside the tank or otherwise can be hit by water jets from the cleaner head.

WARNING

If the actuator is marked with one of the below warnings, due caution is needed during disassembly.

The spring inside is under load – any type of breakage of the actuator can lead to injury!

4.2.1 Installation Orientation

To be operational, the supplied Alfa Laval product should be installed in the recommended orientation, as provided below. If required, the installation shall be made so that self-draining properties (see *Draining* on page 32) of the machine is ensured.

NOTE **Recommended installation orientation**

Any orientation.

4.2.2 Process Setup Recommendation

To separate the CIP system from the process it is recommended to install a shutoff valve close to the machine inlet.

CAUTION

It is recommended that the liquid valve fitted is of a type that prevents hydraulic shocks. Hydraulic shocks may cause severe damage to the machine and/or the entire installation. Ideally, use a frequency controlled pump with a ramp function for start-up to supply the cleaning liquid.

4.2.3 Strainer Recommendations

Larger particles may get trapped by the spray orifice, while smaller particles (e.g., fine sand) may be trapped by the smaller clearances of the machine and increase wear. Magnitude of the issues relies on the particle shape and properties (e.g., soft vs. hard). Experience shows that Alfa Laval tank cleaning devices may operate with strainer sizes larger than recommended below. Contact Alfa Laval Technical Sales Support department or worldwide network of sales offices.

For low amounts of particles in the recirculating CIP liquid larger particles should be avoided and, in this case, a 3 mm strainer may be sufficient for a reliable operation.

For low amounts of particles in the recirculating CIP liquid larger particles should be avoided and, in this case, a 3 mm strainer may be sufficient for a reliable operation.

For high amounts of particles in the recirculating CIP liquid it is recommended to install a strainer of 1 mm.

4.2.4 Draining

The Alfa Laval PlusClean® is drainable by gravity when positioned with more than 35° (center 72°), 55° (offset 22°), and 75° (center 27°) inclination to horizontal.

When the PlusClean is in the closed state and below the horizontal line, liquid can accumulate in the slots, ranging 0.2 - 0.6 ml ±0.2 ml (0.01 - 0.02 oz ± 0.01 oz).

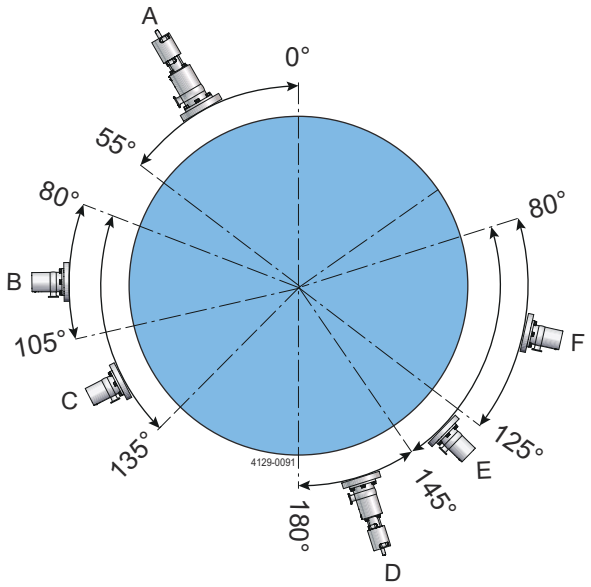

A: Extra draining via actuator

B: Center 27°
(fixed/adjustable weld plate)

C: Center 72°
(adjustable weld plate)

D: Extra draining via actuator
(fixed weld plate)

E: Center 72°
(fixed weldplate)

F: Offset 22°
(fixed/adjustable weld plate)

The adjustable weld plate should be used in applications where the Alfa Laval PlusClean® is installed on tank walls and tank bottoms with more than 45° inclination to horizontal.

The fixed weld plate should be used where the Alfa Laval PlusClean® is installed on the tank bottom or surface with less than 45° inclination to horizontal and more than 5° inclination to horizontal.

In all applications, the device should be mounted in the position where the inlet is directed downwards, to allow draining at all times.

The Alfa Laval PlusClean® is designed for draining if installed according to the orientations shown (for other orientations removal of residual liquid may be achieved using external force e.g. purging for the device with pneumatic actuator).

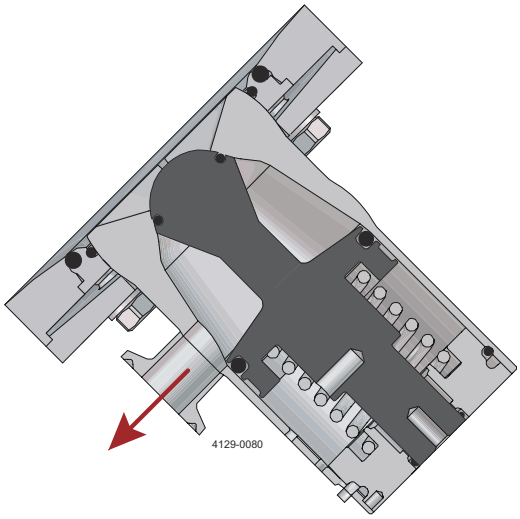

4.2.5 Welding Recommendation

NOTE

For installation of weld plate see *Weld Plate Installation* on page 81.

4.2.6 Attachment to Supply Line

NOTE

It is recommended to have a separate CIP supply line for each machine. If installed on a common CIP supply line, make sure that either:

1. each machine has the correct pressure at the inlet to each machine, or
2. only one of the machines runs at a time with the correct inlet pressure.

The machine is attached to the CIP supply line using the inlet connection.

For rigid supply lines, the inlet connection should align with the CIP supply line. Alternatively, flexible supply lines can be used.

*) Important: Ensure flexibility in the supply line to accommodate the nozzle adjustment feature.

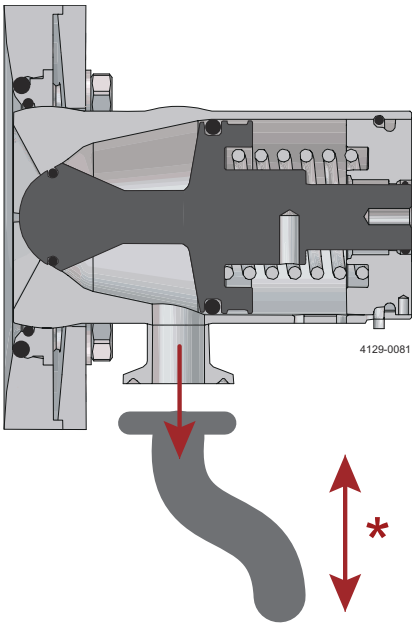

4.2.7 Installation of Externally Mounted Tank Cleaning Devices

The machine shall be mounted into or onto the designated welded process connection (see *Weld Plates* on page 72) using appropriate fasteners.

Alfa Laval PlusClean® has 2 types of weld plates: Adjustable weld plate and fixed weld plate.

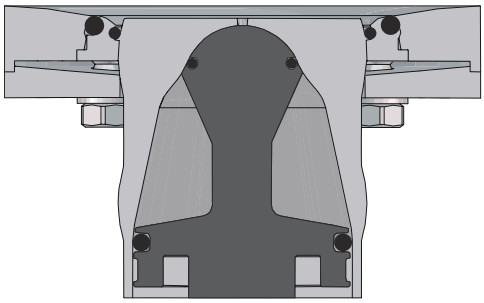

Adjustable weld plate

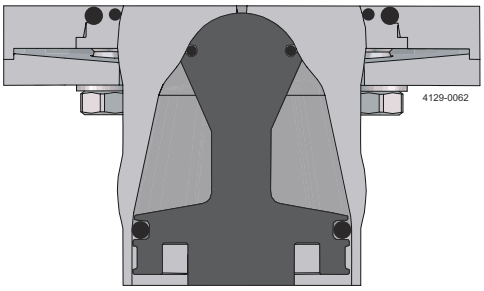

Fixed weld plate

The fixed weld plate allows the PlusClean to rotate around the centre line. The adjustable weld plate allows adjusting the angle of the PlusClean nozzle ±5° from the centre along all 3 axes.

4.2.7.1 Mounting

1. Install both O-rings on adapter and then push adapter into the weld plate.

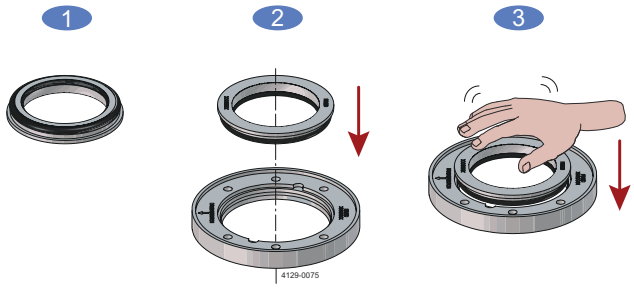

2. Mount the Alfa Laval PlusClean® inside the weld plate with adapter and put in the locking rings to hold the device in place. The groove on the weld plate should align with the step on the locking ring to ensure correct installation of the device.

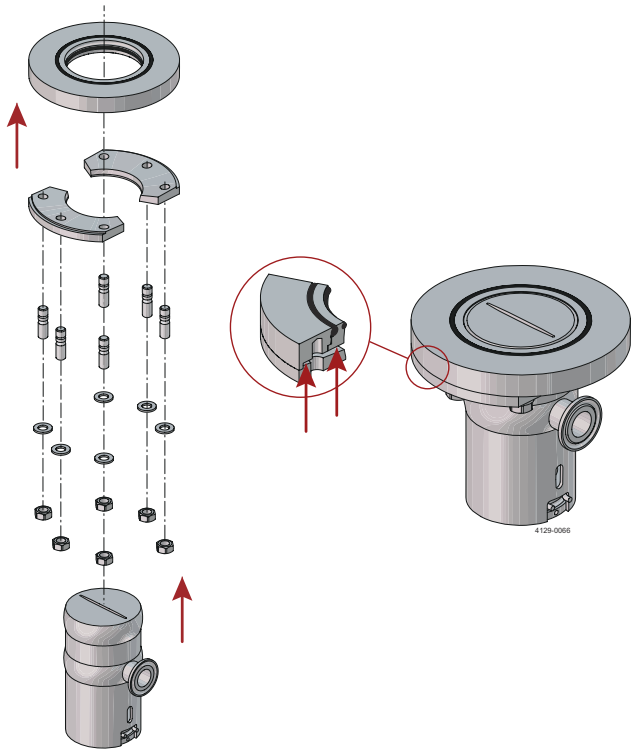

3. Orientate the Alfa Laval PlusClean® in the desired position and fasten the bolts.

4

Minimum free space above Actuator

When installing the device with Actuator without indication unit (for example a ThinkTop® unit), a minimum distance of 122 mm/4.803" (H) above the Actuator is required to avoid pinching of a hand placed on top of the Actuator.

H = Min. distance: 122 mm / 4.803"

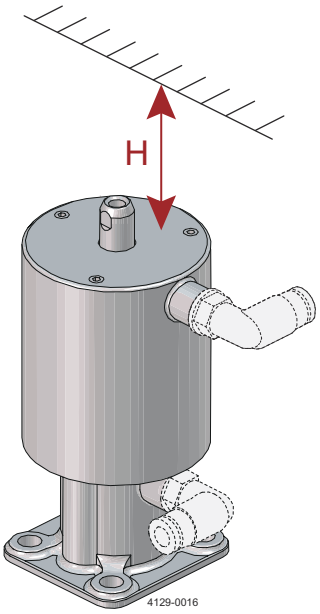

4.2.7.2 Orientation of Spray

The adjustable weld plate has a curved surface on the tank side of the weld plate and allows adjusting the angle of the device ±5° from the centre along all 3 axes.

The fixed weld plate only allows the device to rotate around Z-axis. It is drainable at all angles due to the flat top surface.

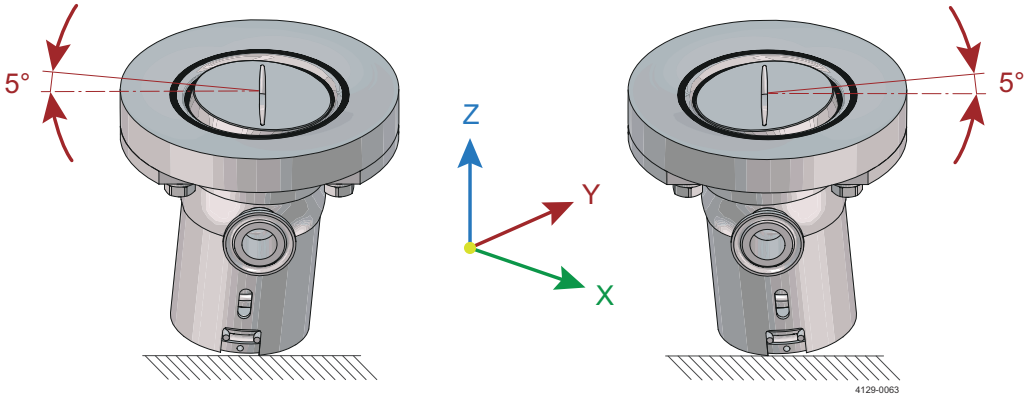

To ensure that the PlusClean nozzle, after service/maintenance, is placed in exactly the same position as when commissioning, we recommend that a clear marking of the position is made already during commissioning. Marking must be done on both the weld plate and the nozzle - as opposed to the inlet orientation (marked with an arrow). Marking is done by engraving or with permanent ink / paint, see figure *Position of PlusClean nozzle* on page 37.

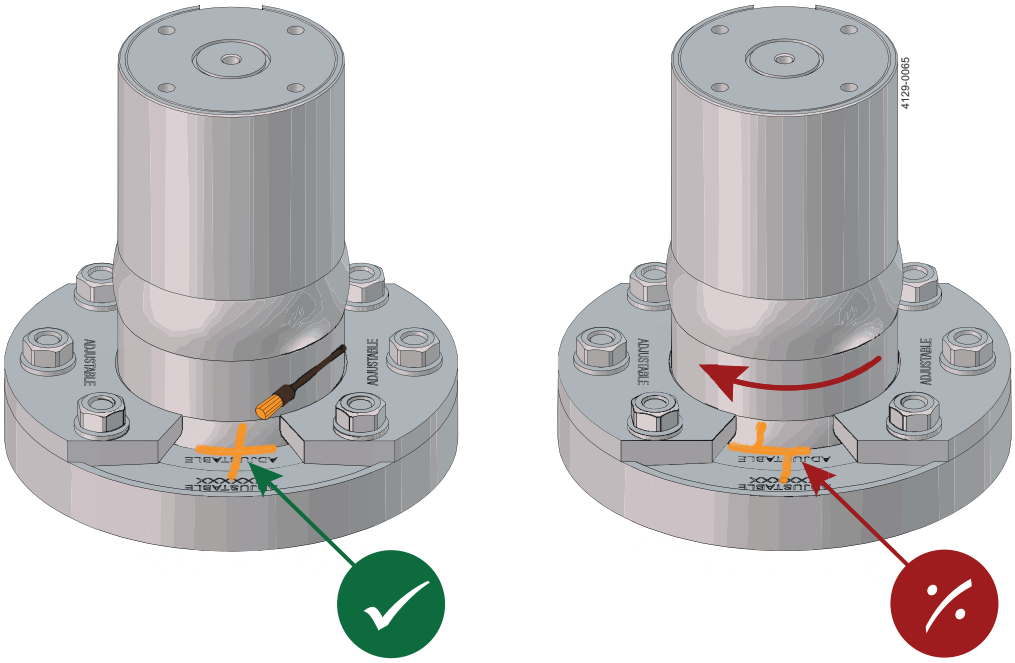

Figure 1: Position of PlusClean nozzle

4.3 Specific conditions for safe use in accordance with ATEX/UKEx/IECEx certification

Directive 2014/34/EU

NOTE **Explosion protection type**

Explosion protection type is constructional safety “c”.

Warning: **Operating guidance**

The unit shall be operated in line with guidance provided by IEC/TS 60079-32-1 for tank cleaning.

Warning: **Temperature class and ambient temperature range**

The maximum surface temperature depends mainly on operating conditions which are the temperature of the cleaning fluid and ambient temperature.

The temperature class and ambient temperature range are shown in section *ATEX/UKEx/IECEx Temperature Class and Code* on page 28.

Warning: **Max. permitted temperature**

When working: The maximum permitted mixing / cleaning fluid temperature and ambient temperature is 95 °C.

When not working: The maximum permitted ambient temperature is 140 °C.

Warning: **Draining using compressed air**

Drain only using inert gas or clean air.

Warning: **Earthing**

All metal and other conductive or dissipative material should be connected to earth except for very small items.

For further information see IEC/TS 60079-32-1:2013 Explosive atmospheres – Part 32-1: Electrostatic hazards, guidance.

With focus on clause 6.2.3, 7.2.1, 7.3, 7.9.2, 13.

Warning: **Earthed when in use**

The unit shall be effectively earthed at all times when in use maintaining metal to metal continuity, via the units’ installation.

Warning:

Max. permitted steaming temperature

The maximum permitted steam temperature through the machine and ambient temperature is 121 °C.

Warning:

Steaming tanks larger than 100 m³

Tanks with capacities larger than 100 m³ that could contain a flammable atmosphere should not be steam cleaned, as steam cleaning tanks produces an electrostatically charged mist.

Tanks smaller than 100 m³ may be steam cleaned.

Warning:

Tank size information

The unit shall not be operated in a vessel having an enclosed volume of greater than 100 m³.

Warning:

Process generated electrostatic

The user shall address the electrostatic hazards generated from the process of the equipment in accordance with guidance document IEC/TS 60079-32-1.

Warning:

Electrostatically charged liquid

Liquids can become electrostatically charged when they move relative to contacting solids or the spraying of liquids can also create a highly charged mist or spray. The liquid shall be made electrically conductive by additives or otherwise.

For further information see IEC/TS 60079-32-1

Warning:

Appropriate cleaning fluid

The cleaning fluid shall be either a non-flammable liquid, or a liquid that does not give off a flammable vapour.

When used for cleaning tanks containing potentially flammable liquids and/or dust atmospheres, and a potentially flammable fluid is used as the cleaning fluid, then an assessment of the hybrid mixture shall be undertaken by the user prior to operation.

Warning:

Fluid pressure

The maximum permitted cleaning fluid pressure is 7 bar.

Warning:

Piston speed

The air pressure for the actuator shall not exceed 7 bar, ensuring the movement of the piston shall not exceed 0.16 m/s.

Warning: **Dust layers**

Do not allow dust layers to build up on the unit.

Warning: **Actuator**

Only a pneumatic actuator supplied by Alfa Laval Kolding A/S shall be used. The actuator shall only be mounted in a safe area.

In addition to the above mentioned precautions relating to the ATEX/UKEx/IECEx guidelines Directive 2014/34/EU, the *Safety Precautions* on page 12 must be observed.

5 Operation

NOTE

Alfa Laval cannot be held responsible for incorrect operation.

Always read *Safety Precautions* on page 12.

Always read *Technical Data* on page 63.

Always use Alfa Laval genuine spare parts. The warranty of Alfa Laval products is dependent on use of Alfa Laval genuine spare parts.

WARNING **Prevent startup**

Precaution shall be made to prevent starting the cleaning operation, while personnel are inside the tank or otherwise can be hit by water jets from the cleaner head.

CAUTION

Always handle CIP and SIP chemicals with great care.

Always use rubber gloves!

Always use protective goggles!

Always rinse with clean water after using a cleaning agent.

NOTE

Always store/dispose cleaning agents in accordance with current regulations/ directives.

WARNING

If the actuator is marked with one of the below warnings, due caution is needed during disassembly.

The spring inside is under load — any type of breakage of the actuator can lead to injury!

WARNING

Never touch the supplied Alfa Laval product and the pipelines when processing hot fluids or when sterilising.

5.1 Normal Operation

5.1.1 Media Driven

NOTE **Media**

Only use media compatible with materials shown in chapter *Technical Data* on page 63.

Never use aggressive chemicals, excessive concentrations of chemicals at elevated temperatures, as well as certain solvents hydrochlorides. If you are in doubt, contact your local Alfa Laval sales office.

EPDM exposed to fatty materials may swell significantly.

NOTE **Temperature**

Never exceed 95 °C (203 °F) when flowing cleaning media through the machine. However, the machine withstands surrounding temperatures of up to 140° C (284 °F).

It is advisable to use the Alfa Laval PlusClean® with the Actuator (see *Pneumatic Driven* on page 43) when using air/steam or when purging the system (otherwise there is a risk of hammering of the piston).

NOTE **Pressure**

Always check that the CIP process connections are correctly mounted.

Always apply media pressure gradually to avoid hydraulic shocks. Hydraulic shocks might stress mechanical parts.

Always see *Technical Data* on page 63 for recommended and maximum operating parameters.

NOTE **Vessel drainage**

Ensure the tank bottom is drained during cleaning.

Ensure tank bottom is pitched toward an opening large enough to avoid liquid buildup or puddling.

Always use a scavenger or suction pump if gravity is insufficient to avoid liquid buildup.

5.1.2 Pneumatic Driven

Function AA: Air/Air (double acting)

- For the Alfa Laval PlusClean® it may be used for opening and closing the Alfa Laval PlusClean®
- The Alfa Laval PlusClean® is opened by applying control pressure to the bottom control connection and closed by applying control pressure to the top control connection
- With a solenoid valve 3/2 and 5/2 way for connection below and above

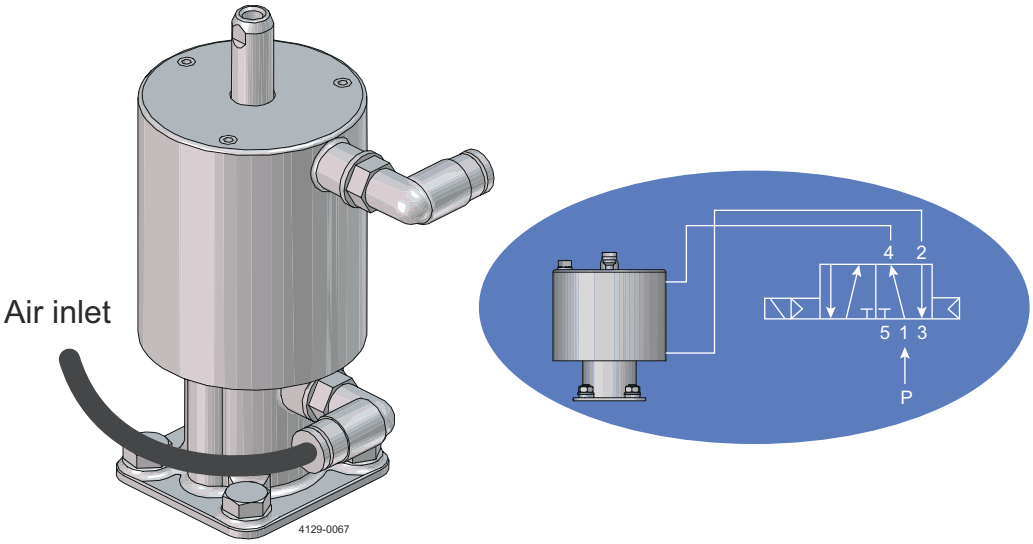

WARNING **Air supply**

Always connect air supply hose to push-in fitting. Make sure that the air supply hose is fitted properly. To reduce risk of whiplash, fasten air supply hose to other supply lines as close to the push-in fitting as practically possible.

CAUTION

Do **not** operate Actuator with cleaning media pressure on.

NOTE

IMPORTANT: Piston shall be retracted before cleaning media supply is started.

- The cleaning media passes through the body and out through the slot opening

- When cleaning is completed, the supply of cleaning media is shut off

5.2 Recommended Cleaning

The internal surfaces of the tank cleaning device are cleaned by the cleaning liquid passing through the tank cleaning device. The external surfaces of the spray head are cleaned by cleaning liquid expelled from the tank cleaning device itself, either as targeted cleaning or free falling film cleaning. The surfaces of the tank cleaning device exposed to the inside of the tank not targeted by cleaning liquid from the tank cleaning device itself are cleaned by the cleaning liquid sprayed on the surfaces from a second tank cleaning device.

- the minimum flow of the falling film should be 2.5 gal/min/ft (31 l/min/m) of inner vessel circumference
- After use, flush the machine with fresh water
- Cleaning media should never be allowed to dry or remain in the system due to possible "salting out" or "scaling" of the cleaning media. If cleaning media contains volatile chloride solvents, it is recommended not to flush with water after use, as this might create hydrochloric acid
- Hot chemical may be used for cleaning and sterilization. If steaming is needed, contact you local Alfa Laval office for recommendation.
- Protect against scalding and burning

5.3 Troubleshooting

NOTE

Study the maintenance instructions carefully before replacing worn parts – see *Maintenance* on page 47.

WARNING

If the actuator is marked with one of the below warnings, due caution is needed during disassembly.

The spring inside is under load – any type of breakage of the actuator can lead to injury!

Problem	Possible causes	Action
Leakage at piston	• Worn or damaged lipseal	• Replace lipseal
Leakage at clamp connections	• Worn or damaged O-rings	• Replace O-ring
Leakage at seal towards product zone	• Worn or product affected plug seal	• Replace seal
	• Product deposit on seal and/or seat	• More frequent cleaning
Piston is not restoring to original position	• Foreign objects in inlet house	• Inspect inlet house and remove foreign objects
	• Damaged spring	• Replace spring
	• Worn out O-ring	• Replace O-ring
Poor cleaning performance	• Insufficient flow/pressure	• Refer to the pressure-flow graph to reconfirm the recommended operating conditions at the device • Reconfirm minimum flow rate recommended for size of surface being cleaned (e.g., based on ASME BPE recommendations)
	• Incorrect cleaning media	• Verify temperature and concentration of the cleaning media
	• Insufficient time	• Verify cleaning time
	• Debris in the orifice	• Inspect orifice and remove debris
	• Poor drainage of tank	• Ensure the tank drains cleaning fluid at an equal or faster rate than sprayed in through all tank cleaning devices
Leakage out leak detection hole	• Large piston O-ring worn out	• Replace O-ring

This page is intentionally left blank.

6 Maintenance

NOTE

Alfa Laval cannot be held responsible for incorrect maintenance.

Always read *Safety Precautions* on page 12.

Always read *Technical Data* on page 63.

Always use Alfa Laval genuine spare parts. The warranty of Alfa Laval products depends on use of Alfa Laval genuine spare parts.

Alfa Laval recommend keeping service kits in stock to optimise uptime of your equipment.

WARNING

If the actuator is marked with one of the below warnings, due caution is needed during disassembly.

The spring inside is under load – any type of breakage of the actuator can lead to injury!

WARNING

Never touch the supplied Alfa Laval product and pipelines when processing hot liquids or when sterilising.

6.1 Preventive Maintenance

NOTE

Always handle the machine with care. Take proper action to protect fine surfaces from being damaged.

Use only proper tools (e.g., the Alfa Laval standard tool kit). **Never** force or hammer components together or apart. Always perform all assembly/disassembly steps in the order described in this Instruction Manual.

Never assemble components without previous cleaning. This is especially important at all mating surfaces.

Work in a clear well-lighted work area.

Always use Alfa Laval genuine spare parts.

To optimise the operation of the machine and to minimize the down time due to repair activities, the maintenance should consist of:

- **Inspection and maintenance:** Strictly follow the technical documentation
- **Preventive maintenance:** Visual inspection of the supplied Alfa Laval product followed by necessary adjustments and planned periodic replacement of wear and tear parts
- **Repairs:** Unscheduled break-down of a component, often causing the system to stop. Damaged components shall be replaced or repaired
- **Stock of Alfa Laval genuine spare parts:** Alfa Laval recommends keeping a stock of genuine spare parts facilitating preventive maintenance and reducing down time in case of unplanned breakdowns

NOTE

According to “Regulation (EC) No 1935/2004 - Article 17” effective from 27th of October 2006, producers of food shall ensure traceability of the materials and articles intended to come into contact with foodstuffs. It is recommended that a traceability system is setup for replacement of wear parts and spare parts. This makes it possible to identify into which machine a given wear part or spare part has been inserted.

The recommended preventive maintenance program provided in *Recommended Service Intervals* on page 50 is based on tank cleaning devices working in average conditions. However, a tank cleaning device, exposed to heavy soiling and recirculation CIP liquid containing abrasives and/or particulates needs more frequent attention than one exposed to light/no soiling and recirculation with ordinary CIP liquid. Alfa Laval Kolding A/S recommends that you adjust the maintenance program to suit the cleaning task in hand. Contact your local Alfa Laval sales office for discussion.

For further information regarding Alfa Laval Service Kits and service intervals, see *Recommended Service Intervals* on page 50.

6.2 Service and Repair of ATEX/UKEX/IECEx Certified Machines

WARNING

All service and repair of ATEX/UKEX/IECEx certified machines can be performed by Alfa Laval Kolding A/S, Denmark or by an Alfa Laval service center approved by Alfa Laval Kolding A/S.

Changes to the machine are not allowed without approval by the person responsible for the ATEX/UKEX/IECEx certification at Alfa Laval. If changes are made – or spare parts other than Alfa Laval original spare parts are used - the EC Type Examination certification (the ATEX/UKEX/IECEx Directive) is no longer valid.

In order to ensure compliance with the ATEX/UKEX/IECEx regulations and keep the machine ATEX/UKEX/IECEx certification valid, the service or repair must be performed by an authorized person with knowledge of the ATEX/UKEX/IECEx requirements and regulations. All spare parts must be original Alfa Laval spare parts and the repair or service must be done according to the instructions in this manual.

If a customer wishes to carry out service or repair himself, it is the responsibility of the repair shop to ensure that the ATEX/UKEX/IECEx are met in any way possible. After performing service or repair, the repair shop thus carries the full responsibility for traceability of all relevant documents in order to ensure the retention of the ATEX/UKEX/IECEx certification of the machine.

6.3 Recommended Service Intervals

It is recommended that the wear parts are checked every 3000 actuations (after 10000 actuations: inspection every 1000 actuations) for machine working under normal conditions.

Recommended spare parts and service kits: See *Spare Parts* on page 75.

(#) refers to position numbers, see *Parts Lists and Exploded Views* on page 77

WARNING

Use only pure water at normal temperature for safety reasons.

Use goggles when checking rotation.

An inspection consists of:

1. At a pressure of 2 bar open a hatch in the tank to verify liquid is expelled from all orifices. If needed proceed to 2.
2. Un-install the machine as described in *Uninstall for Maintenance* on page 51.
3. Visual inspection for foreign objects. Remove any objects and clean before disassembly.
4. Disassemble the machine as described in *Disassembly* on page 51.
   a. Check for debris in body (9).
   b. Check O-rings (2, 3, 10 and 11) for wear.
   c. Check Guide ring (12) for damage.
   d. Check bushing (16) for deterioration.
   e. Check spring (14) for damage
5. Reassemble the machine as described in *Assembly* on page 59.
6. Reinstall machine as the reverse of *Uninstall for Maintenance* on page 51.
7. Fill in service log.

6.4 Dismantling

NOTE

Handle scrap correctly – See *Recycling Information* on page 19.

WARNING

If the actuator is marked with one of the below warnings, due caution is needed during disassembly.

The spring inside is under load – any type of breakage of the actuator can lead to injury!

WARNING **Air supply**

Always connect air supply hose to push-in fitting. Make sure that the air supply hose is fitted properly. To reduce risk of whiplash, fasten air supply hose to other supply lines as close to the push-in fitting as practically possible.

6.4.1 Uninstall for Maintenance

Disconnect the machine from the CIP supply line by loosening the cleaning media inlet connection (clamp or nut) and remove the gaskets.

Uninstall machine as the reverse of *Installation of Externally Mounted Tank Cleaning Devices* on page 34.

Clean material build-up and deposits from external parts with water or suitable chemical cleaner, possibly Scotch-brite, S-Ultrafine.

6.4.2 Disassembly

NOTE

Before disassembly, **always** thoroughly read the disassembly instructions and the Spare Part manual available on *anytime.alfalaval.com/alweb/*.

Always replace all parts included in the Service Kit.

Always clean all tools and fixtures prior to assembly/disassembly to ensure that scratches and marks and trace of soil/corrosion from tools are avoided.

Never scratch or damage the surfaces of the machine.

Always place components on soft material.

Always check surfaces for product residues and clean all parts before assembly.

Always assemble the machine as described on the following pages.

CAUTION

During disassembly and assembly, the threads can gall. If any resistance is felt when screwing/unscrewing parts, proceed with caution.

6.4.2.1 Disassembly of Pneumatic Actuator

NOTE

Never disassemble the pneumatic actuator.

Alfa Laval Kolding A/S do not recommend or support disassembly of the pneumatic actuator.

The pneumatic actuator is non-serviceable. With malfunction the complete pneumatic actuator must be replaced.

1

Depressurize the Actuator.

Disconnect the air supply. This will actuate the device to “closed” position.

Remove the screws holding the Actuator in place.

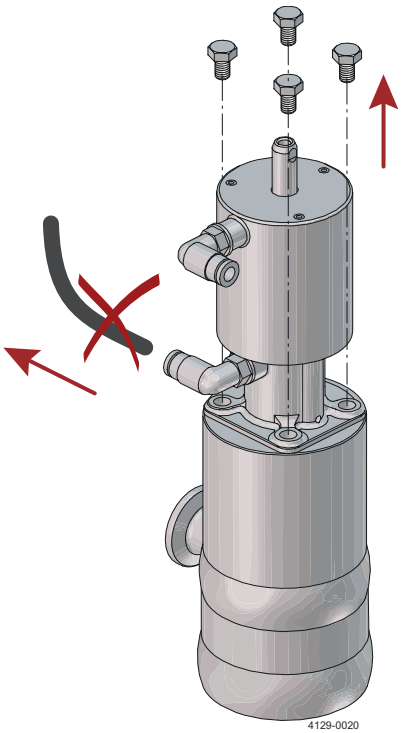

2 Rotate the Actuator anti-clockwise to unscrew the connecting stud (if too tight see below) and separate the Actuator from the Alfa Laval PlusClean®.

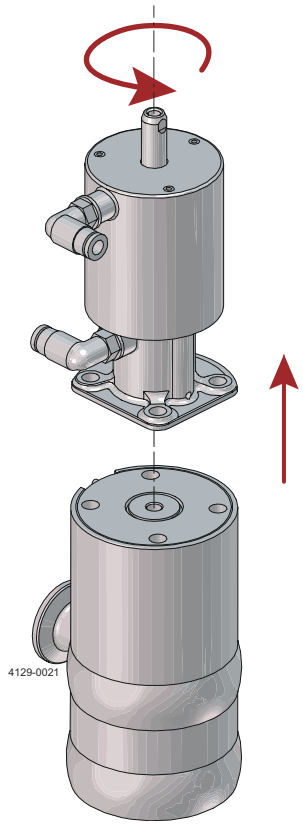

In case of tightened stud, use a wrench and rotate the Actuator spindle till the hole on the Alfa Laval PlusClean® piston is in-line with the opening on the body.

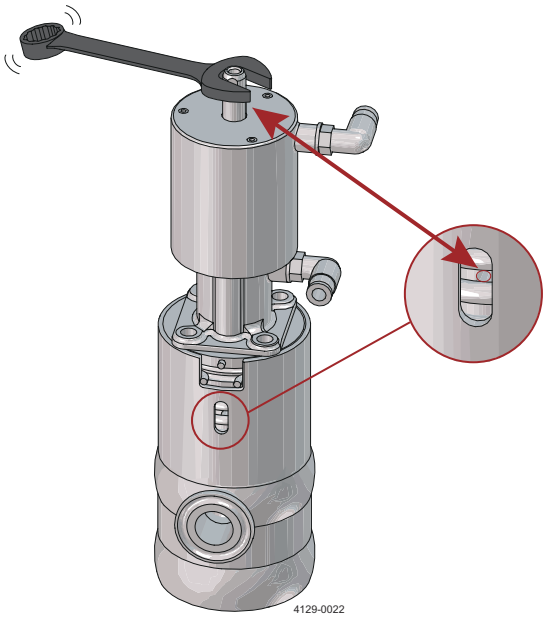

Insert a tool like Allen key in the hole (5 mm/0.2") to lock the piston rotation and loosen the Actuator spindle to dismount it.

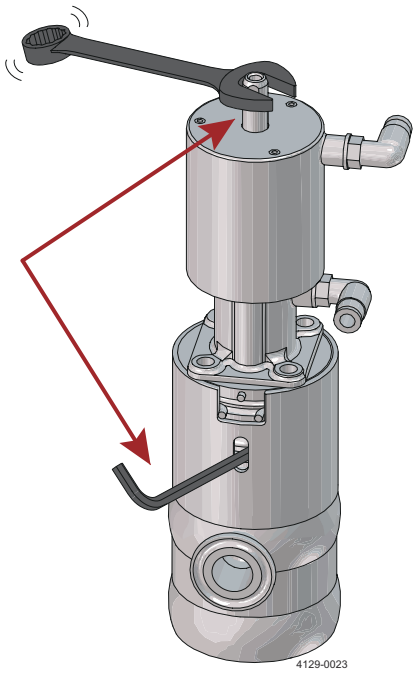

6.4.2.2 Disassembly of Alfa Laval PlusClean®

1. Use the spring tool and assemble it with the threaded rod, washer and nut provided.

   Before dismantling, fill the Alfa Laval PlusClean® with water and then drain it to lubricate the O-rings.

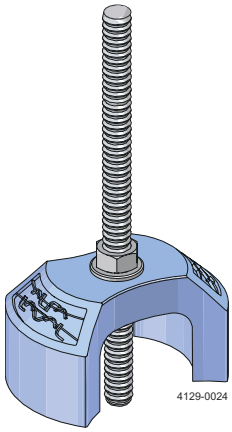

2 Place the Alfa Laval PlusClean® with the end plate facing up. Screw spring tool assembly into the piston firmly. Rotate the nut clockwise with help of wrench pushing the end plate down until the retaining ring is aligned with the bigger groove on the end plate.

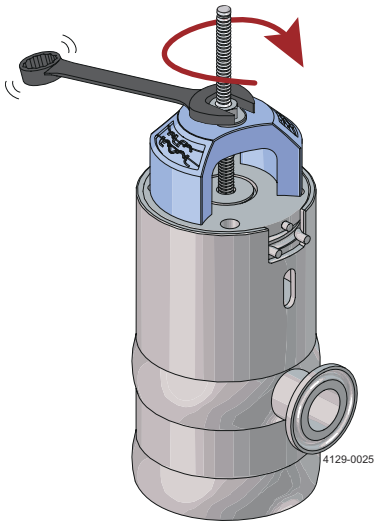

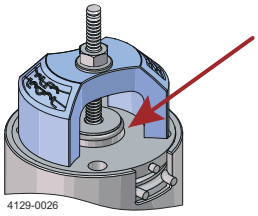

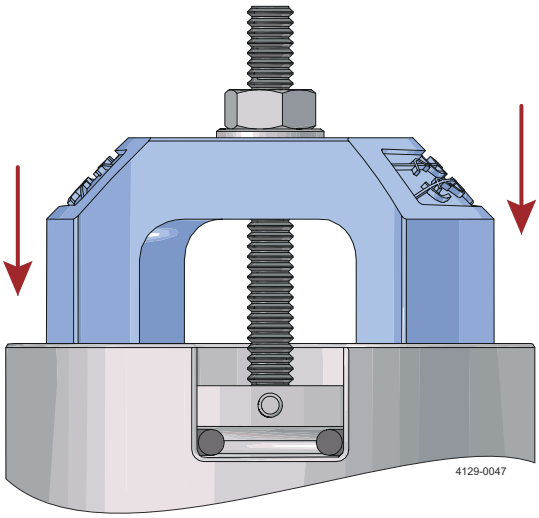

3 Secure the machine in a vise without causing surface damage to it.

WARNING

Use soft jaws on the vise.

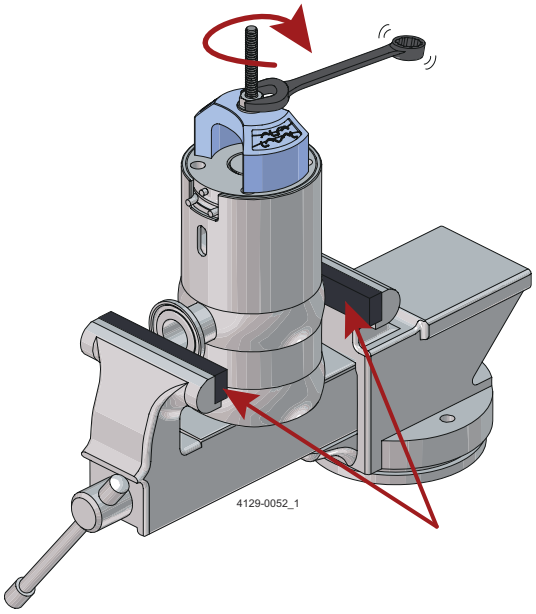

4 With the help of pliers squeeze the ends of retaining ring until it is disengaged from the groove.

Pull the entire assembly of end plate and piston out of the body (if too tight see below).

In case it is hard to pull out the assembly, insert a tool like Allen key (5 mm/0.2") in the hole on the piston through the opening on the body and push it downwards to raise the end plate out of the body. Pull the entire assembly of end plate and piston out of the body.

NOTE

For replacing the service kit remove the spring tool and go to step *5* on page 57.

To replace the spring or bushing continue with step *8* on page 58.

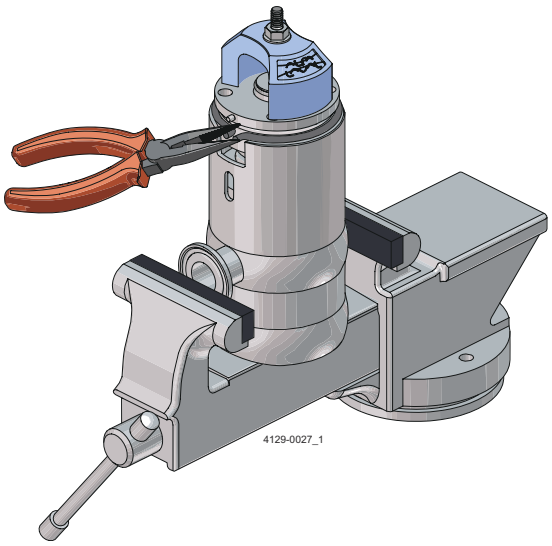

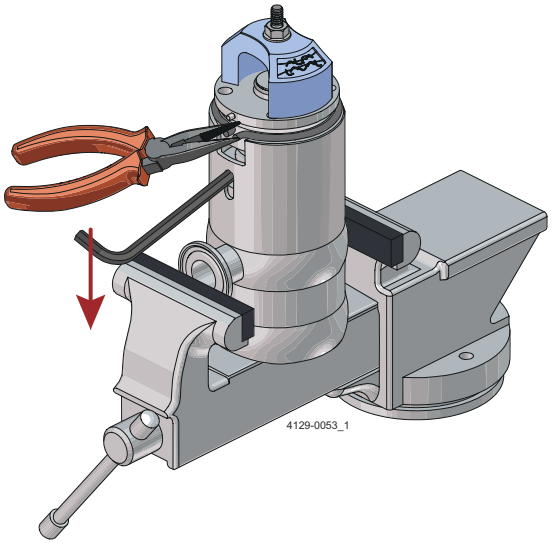

5 Secure the piston with the spring tool mounted on it in a bench vise without causing surface damage to it.

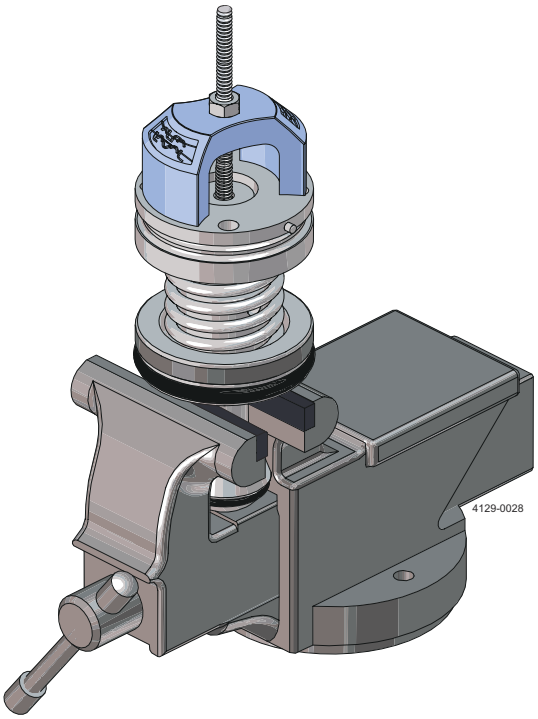

6 Using a wrench, turn the nut on the spring tool clockwise pulling the piston up from the end plate until the small retaining ring is exposed. With help of pliers remove the small snap ring from its groove.

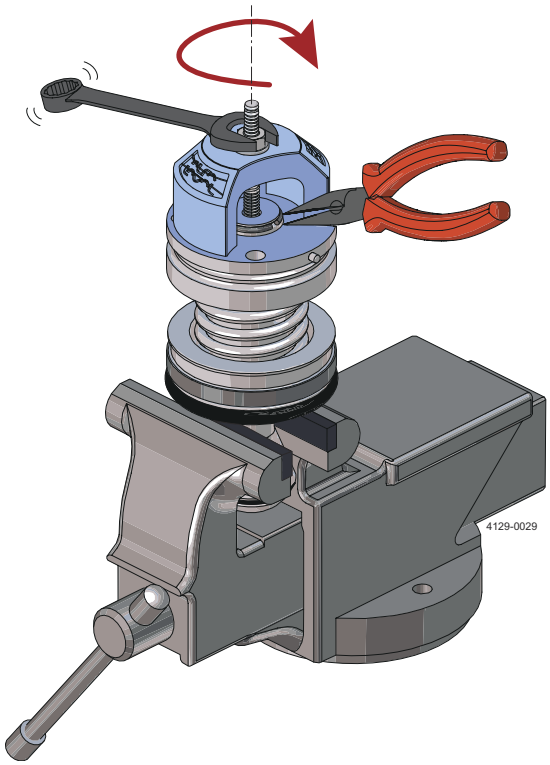

7 Carefully unthread the spring tool from the piston to separate the end plate from the piston. Remove the spring from the piston.

CAUTION

With no retaining ring holding the spring, the spring will push out the end plate with force.

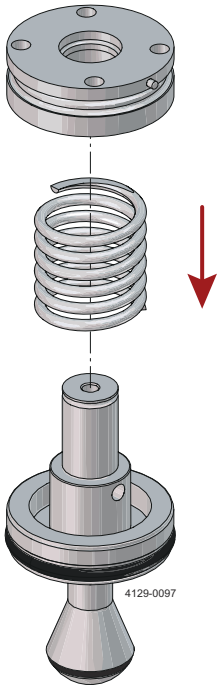

8 Remove the guide ring and both O-rings. If they are damaged replace with new ones.

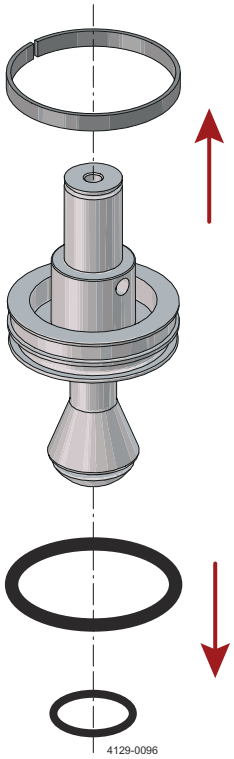

6.5 Assembly

NOTE

All parts must be cleaned thoroughly before reassembling.

Any deposits remaining on the parts can cause difficulty disassembling again.

Reverse order of *Disassembly* on page 51.

NOTE

Make sure to align the pin on the end plate with the hole in the piston.

Lubricate O-rings (2, 3 and 10) with water.

Lubricate O-ring (11) with food graded lubricant.

6.5.1 Assembly of Pneumatic Actuator

NOTE

Place a soft towel (or equivalent) under the Alfa Laval PlusClean® assembly to prevent it from getting scratched.

1. Make sure the hole on the piston is aligned with the opening in the body.

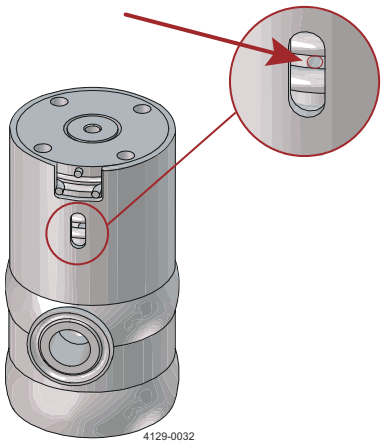

2

Assemble the Actuator with the stud and spacer.

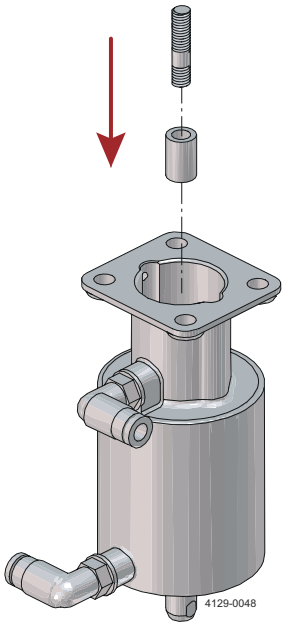

3

Mount the Actuator on the Alfa Laval PlusClean®. Rotate it clockwise until it touches the end plate and all the screw holes are aligned.

Fit in the screws.

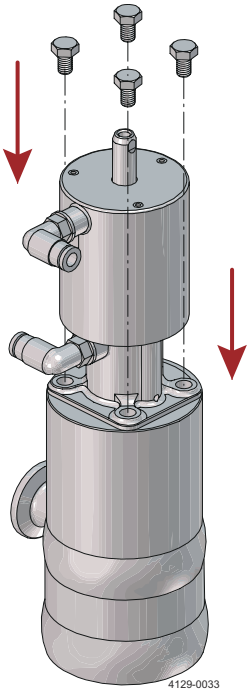

4

Insert a tool like Allen key in the hole (5 mm/ 0.2”) on the piston to fix its position.

Tighten the Actuator spindle with a wrench to a torque of 11.8 Nm = 8.7 lb ft.

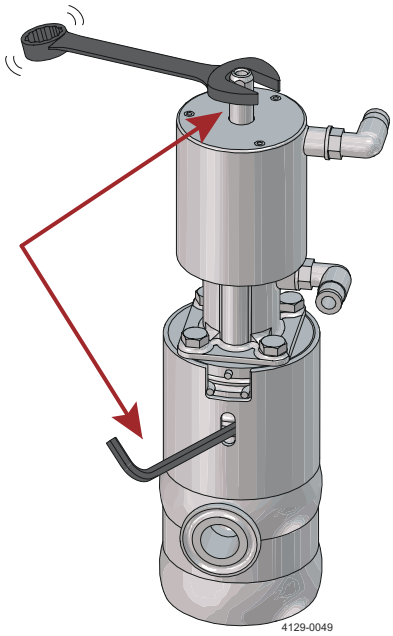

WARNING

Never disassemble the Actuator.

Alfa Laval Kolding A/S do not recommend or support disassembly of the Actuator.

The Actuator is non-serviceable. With malfunction the complete Actuator must be replaced.

This page is intentionally left blank.

7 Technical Data

NOTE

Technical data must be observed during installation, operation and maintenance.

All personnel should be informed about the technical data.

7.1 Alfa Laval PlusClean® Media Driven

7.1.1 Technical Data

Temperature / pressure – process contact	
Temperature range – liquid service	-10 °C – 95 °C (14 °F – 284 °F)
Temperature max. – steam/gas service	121 °C (250 °F)[1]
Temperature max. – ambient	140 °C (284 °F)
Working pressure range – liquid service	1.9 – 7 bar (27.6 – 101.5 PSI)[1]
Recommended operating pressure range – liquid service	2 – 5 bar (29 – 72.5 PSI)
Pressure range – vessel (media driven)	-1 – 4 bar (-14.5 – 58 PSI)

[1] See Specific conditions for safe use in accordance with ATEX/UKEx/IECEx certification

Miscellaneous	
Inlet Connection for cleaning media	ASME-BPE L14AM-0.75 DIN 32676 Reihe A DN 15

7.1.2 Physical Data

Materials	
Steel parts – product wetted	AISI 316L (UNS S31603)
Steel parts – non-product wetted	AISI 304 (UNS S30400)
Seal parts – product wetted	EPDM, FPM
Seal parts – non-product wetted exposed	
Polymer parts – product wetted	
Polymer parts – non-product wetted exposed	PEEK, PTFE

Surface Roughness	
surface finish – external	Ra 1.6 µm
surface finish – cleaning media	Ra 0.8 µm
surface finish – product wetted	Standard: Ra 0.8 µm UltraPure: Ra 0.38 µm EP

7.1.3 Dimensions

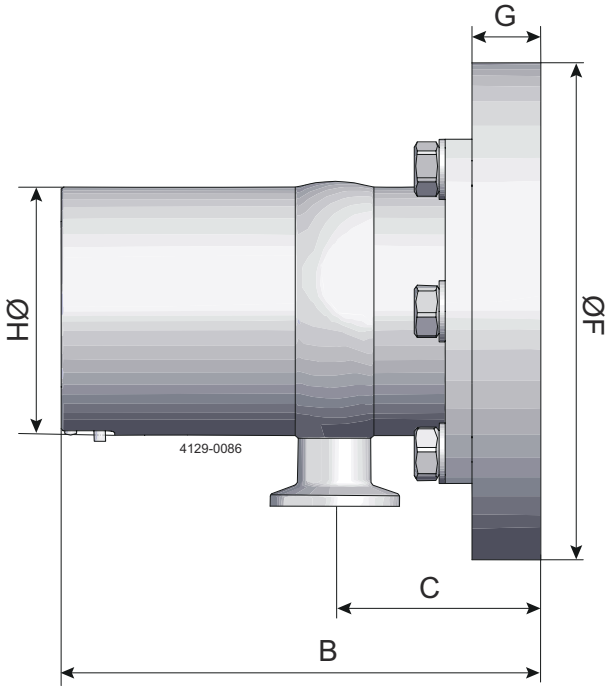

	Stroke	B	C	F	G	H	Weight
Adjustable, mm (inch)	10.9 (0.4)	125.4 (4.9)	53.8 (2.1)	130.0 (5.1)	18.0 (0.7)	65.0 (2.6)	2.1 kg (4.6 lbs)
Fixed, mm (inch)	10.9 (0.4)	122.0 (4.8)	50.5 (2.0)	130.0 (5.1)	15.0 (0.6)	65.0 (2.6)	2.1 kg (4.6 lbs)

7.1.4 Performance Data

NOTE

The inlet pressure has been taken immediately before the machine inlet. To achieve the performance indicated in the curves, the pressure drop in the supply lines between pump and machine must be taken into consideration.

7.1.4.1 Flow Rate

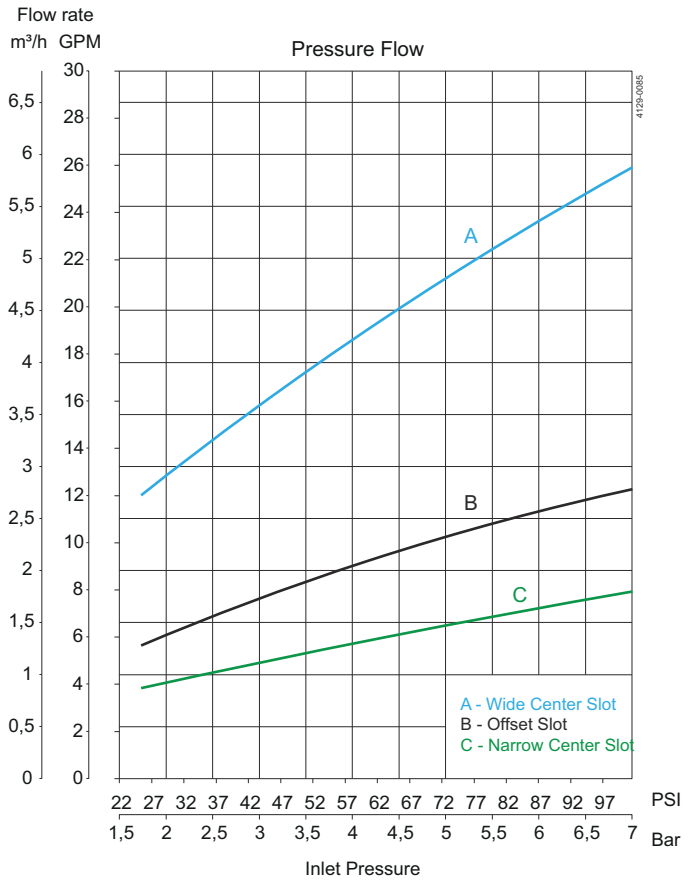

7.1.4.2 Throw Length

NOTE

Throw lengths are measured as horizontal throw length. Effective throw length varies depending on substance to be removed, cleaning procedure and agent.

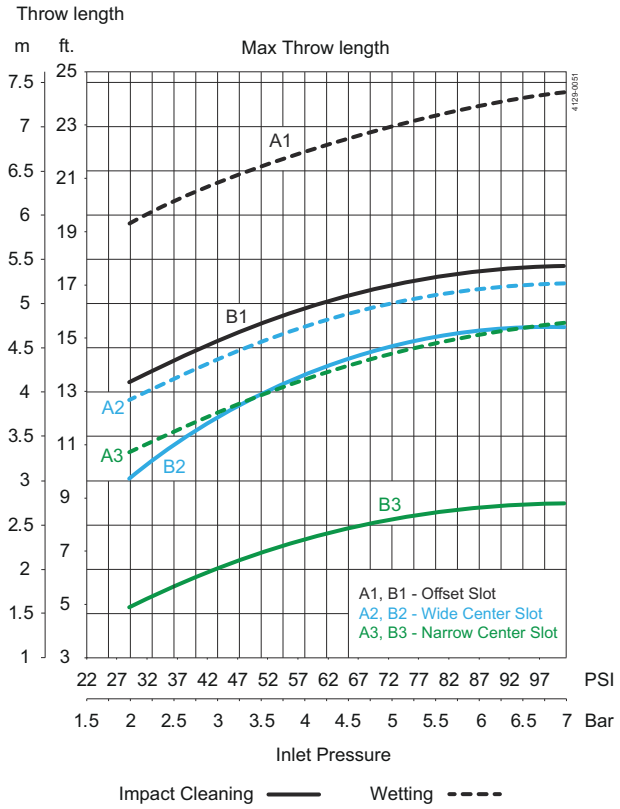

A1: Wetting - Offset slot - A2: Wetting - Wide center slotA3: Wetting - Narrow center slot - B1: Impact cleaning - Offset slot - B2: Impact cleaning - Wide center slotB3: Impact cleaning - Narrow center slot

7.2 Alfa Laval PlusClean® Pneumatic Driven

7.2.1 Technical Data

Temperature / pressure – process contact	
Temperature range – liquid service	-10 °C – 95 °C (14 – 284 °F)
Temperature max. – steam/gas service	121 °C (250 °F)[1]
Temperature max. – ambient	140 °C (284 °F)
Working pressure range – liquid service	1.9 – 7 bar (27.6 – 101.5 PSI)[1]
Recommended operating pressure range – liquid service	2 – 5 bar (29 – 72.5 PSI)
Pressure range – vessel	-1 – 6 bar (-14.5 – 87 PSI)

[1] See Specific conditions for safe use in accordance with ATEX/UKEx/IECEx certification

Temperature / pressure – actuator	
Temperature range	-10 °C – 80 °C (14 – 176 °F)
Pressure range – air supply	4 – 7 bar (58 – 101.5 PSI) [1]

[1] For CIP pressure > 4bar (58 PSI), the air supply pressure must be ≥ the CIP pressure

Miscellaneous	
Inlet Connection for cleaning media	ASME-BPE L14AM-0.75 DIN 32676 Reihe A DN 15
Actuator air connection thread size	ISO 2881/ G1/8"

7.2.2 Physical Data

Materials	
Steel parts – product wetted	AISI 316L (UNS S31603)
Steel parts – non-product wetted	AISI 304 (UNS S30400)
Seal parts – product wetted	EPDM, FPM
Seal parts – non-product wetted exposed	
Polymer parts – product wetted	
Polymer parts – non-product wetted exposed	PEEK, PTFE

Surface Roughness	
surface finish – external	Ra 1.6 µm
surface finish – cleaning media	Ra 0.8 µm
surface finish – product wetted	Standard: Ra 0.8 µm UltraPure: Ra 0.38 µm EP

7.2.3 Dimensions

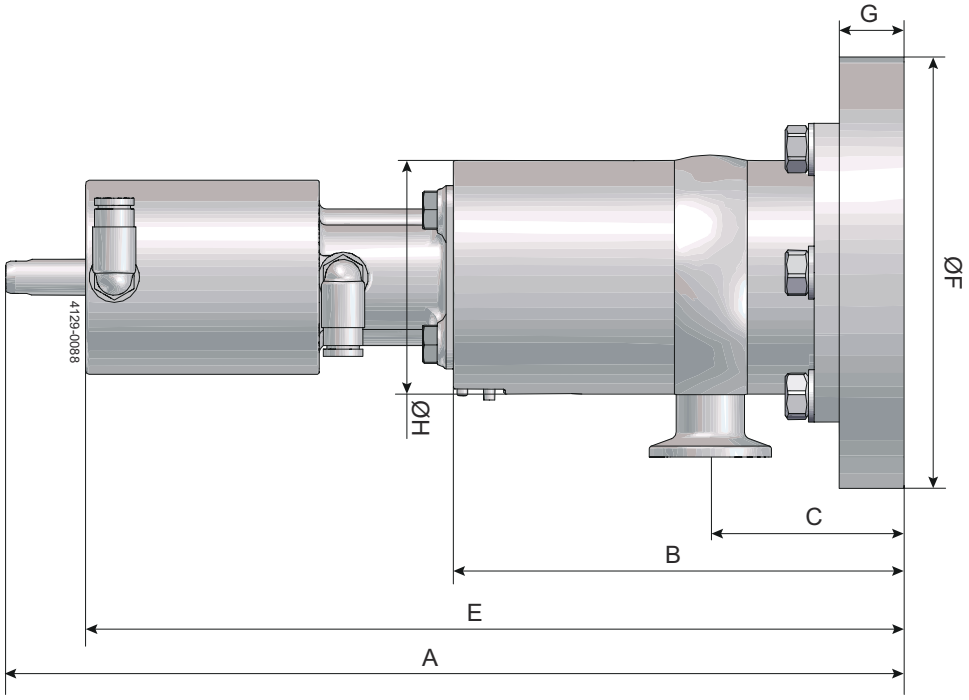

	Stroke	A	B	C	E	F	G	H	Weight
Adjustable, mm (inch)	10.9 (0.4)	238.6 (9.4)	125.4 (4.9)	53.8 (2.1)	227.7 (9.0)	130.0 (5.1)	18.0 (0.7)	65.0 (2.6)	2.7 kg (6 lbs)
Fixed, mm (inch)	10.9 (0.4)	235.2 (9.3)	122.0 (4.8)	50.5 (2.0)	224.3 (8.8)	130.0 (5.1)	15.0 (0.6)	65.0 (2.6)	2.7 kg (6 lbs)

7.2.4 Performance Data

NOTE

The inlet pressure has been taken immediately before the machine inlet. To achieve the performance indicated in the curves, the pressure drop in the supply lines between pump and machine must be taken into consideration.

7.2.4.1 Flow Rate

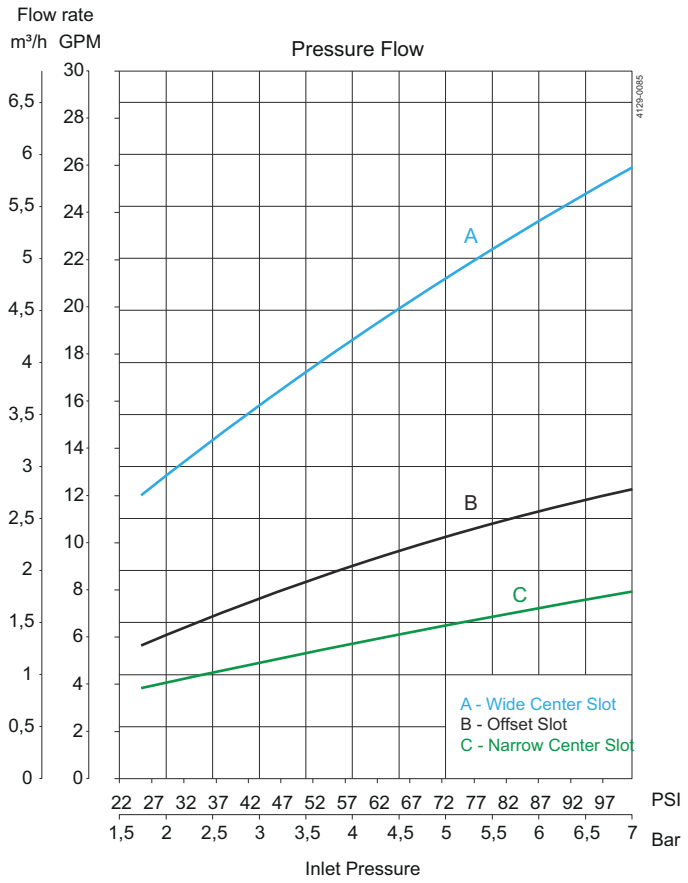

7.2.4.2 Throw Length

NOTE

Throw lengths are measured as horizontal throw length. Effective throw length varies depending on substance to be removed, cleaning procedure and agent.

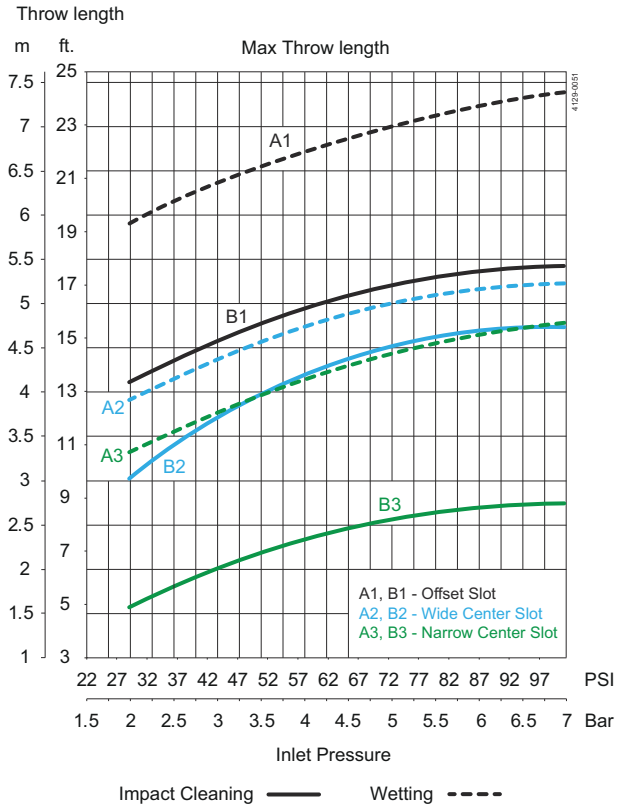

A1: Wetting - Offset slot - A2: Wetting - Wide center slot A3: Wetting - Narrow center slot - B1: Impact cleaning - Offset slot - B2: Impact cleaning - Wide center slot B3: Impact cleaning - Narrow center slot

Performance data for Alfa Laval PlusClean® Pneumatic Driven

- Air supply pressure:Minimum 4 bar (58 PSI) to open the piston
- Air qualityClean filtered max. 40 µm
- Dry, dew point max. 5° C (41° F)

8 Product Programme

Please go to *https://hygienicfluidhandling-catalogue.alfalaval.com* for possible configurations and item numbers.

8.1 Qualification Documentation

Documentation specification

Standard version

ATEX/ UKEx/ IECEx	ATEX/UKEx/IECEx approved machine for use in explosive atmospheres INSIDE MACHINE: Category 1 for installation in zone 0/20 OUTSIDE MACHINE: Safe area only II 1G/- Ex h IIC 85°C…188°C Ga/- II 1D/- Ex h IIIC T85°C…T140°C Da/-

Q-doc	Equipment Documentation includes: • EN 1935/2004 DoC • EN 10204 type 3.1 inspection Certificate and DoC • FDA DoC • GMP EC 2023/2006 DoC • EU 10/2011 DoC • ADI DoC • QC DoC

UltraPure version

ATEX/ UKEx/ IECEx	ATEX/UKEx/IECEx approved machine for use in explosive atmospheres INSIDE MACHINE: Category 1 for installation in zone 0/20 OUTSIDE MACHINE: Safe area only II 1G/- Ex h IIC 85°C…188°C Ga/- II 1D/- Ex h IIIC T85°C…T140°C Da/-

Q-doc	Equipment Documentation includes: • EN 1935/2004 DoC • EN 10204 type 3.1 inspection Certificate and DoC • FDA DoC • GMP EC 2023/2006 DoC • EU 10/2011 DoC • ADI DoC • QC DoC • USP 87 and 88 Class VI or ISO 10993-5 and ISO 10993-6, -10, -11 DoC (for UltraPure products)

8.2 Accessories

8.2.1 Weld Plates

8.2.1.1 Specification of Pressure Weld Plates According to PED 2014/68/EU

Specification for weld plates: Adjustable and Fixed

Design Data	
Corrosion allowance:	0 mm (0 inch)
Material:	1.4404 EN 10028-7 and EN 13445
Design temperature:	150 °C (30 2 °F)
Minimum design metal temperature:	0 °C (0 °F)
Maximum allowable working pressure for weld plates[1]:	FV+ 0.7MPa (7 bar/101.5 PSI)
Design pressure, internal:	0.7MPa (7 bar/ 101.5 PSI)
Design pressure, external:	0.1MPa (1 bar / 14.5 PSI)

The design is made according to EN 13445-3 and fulfils the requirements of PED 2014/68/EU.

Weld plates do not have a component certificate, but material certificate and pressure calculations can be supplied.

[1] Mount blind cap in the weld plates (not Alfa Laval PlusClean®) when pressure testing the tank.

8.2.1.2 Specification of Pressure Weld Plates According to ASME VIII div. 1 and div. 2

Specification for weld plates: Adjustable and Fixed

Design Data	
Service:	Non-toxic
Corrosion allowance:	0 mm (0 inch)
Material:	Type 316L
Design temperature:	150° C (302° F)
Minimum design metal temperature:	0° C (0° F)
Maximum allowable working pressure for weld plates:[1]	FV+ 0.7MPa (7 bar/101.5 PSI)
Design pressure, internal:	0.7MPa (7 bar/101.5 PSI)
Design pressure, external:	0.1MPa (1 bar/14.5 PSI)

The design is made according to ASME VIII div. 1 and div. 2 and fulfils the requirements of the ASME standards.

Weld plates do not come with a U2 certificate, but material certificate and pressure calculations can be supplied.

8.2.2 Sensor and Control Units

The Alfa Laval PlusClean® can work with or without a sensor or a control unit.
Alfa Laval ThinkTop V20 and V50 series fit onto the actuator of the Alfa Laval Free Rotating Retractor if sensor or control unit is needed.

Please go to *Anytime* for possible configurations and item numbers.

This page is intentionally left blank.

9 Spare Parts

For every delivered Alfa Laval Product, a spare part list is available.

This spare part list contains a range of the most common wear parts for the machinery. If any component not mentioned is required, please contact your local Alfa Laval representative for availability.

You can find our spare part catalogue at *https://hygienicfluidhandling-catalogue.alfalaval.com*.

Always use Alfa Laval genuine spare parts. The warranty of Alfa Laval products is dependent on use of Alfa Laval genuine spare parts.

9.1 Ordering Spare Parts

When ordering spare parts, please always state:

1. Serial number (if available)
2. Item number/spare part number (if available)
3. Capacity or other relevant identification

9.2 Alfa Laval Service

Alfa Laval is represented in all larger countries of the world.

Do not hesitate to contact your local Alfa Laval representative, with any questions or requirement of spare parts for Alfa Laval equipment.

9.3 Warranty - Definition

WARNING

The rules of Intended use are absolute. Use of the supplied Alfa Laval product is allowed only when in compliance with the technical data supplied with the Intended use.

Differing utilisation, other than agreed with Alfa Laval Kolding A/S, exclude any liability and warranty.

No modification or alteration of the supplied Alfa Laval product is allowed, unless explicit permission is granted by Alfa Laval Kolding A/S.

Liability and warranty are excluded:

- If advice and instruction of operating instructions are ignored
- For incorrect operation or for insufficient maintenance of the supplied Alfa Laval product
- For any kind of change of function of the supplied Alfa Laval product without prior written agreement by Alfa Laval Kolding A/S
- If supplied Alfa Laval product is modified by non-authorised persons
- If using the supplied Alfa Laval product without attention of appropriate safety regulations, (see *Safety* on page 9)
- If protection equipment is not used and vessel process / ancillary equipment is not brought to a standstill
- If the supplied Alfa Laval product and ancillary parts are not properly maintained (to be executed in intervals and including fitting of prescribed replacement parts)

When exchanging parts, only original replacement parts, released from the manufacturer, must be used.

10 Parts Lists and Exploded Views

10.1 Media Driven

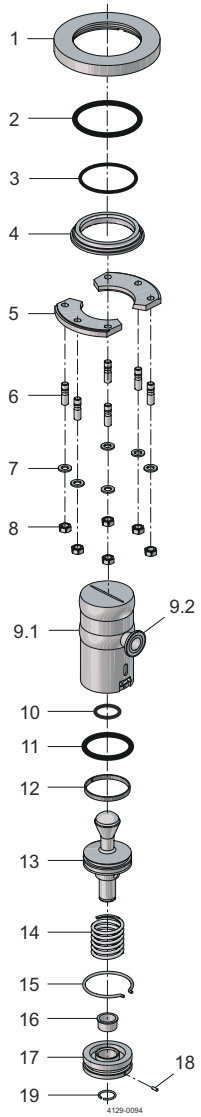

Pos.	Qty.	Denomination	Pos.	Qty.	Denomination
1	1	Weld plate	10	1	O-ring
2	1	O-ring	11	1	O-ring
3	1	O-ring	12	1	Guide ring
4	1	Adapter	13	1	Piston
5	2	Locking ring	14	1	Spring
6	6	Stud	15	1	Retaining ring
7	6	Washer	16	1	Bushing
8	6	Nut	17	1	End plate
9.1	1	Body	18	1	Positioning pin
9.2	1	Inlet	19	1	Retaining ring

10.2 Pneumatic Driven

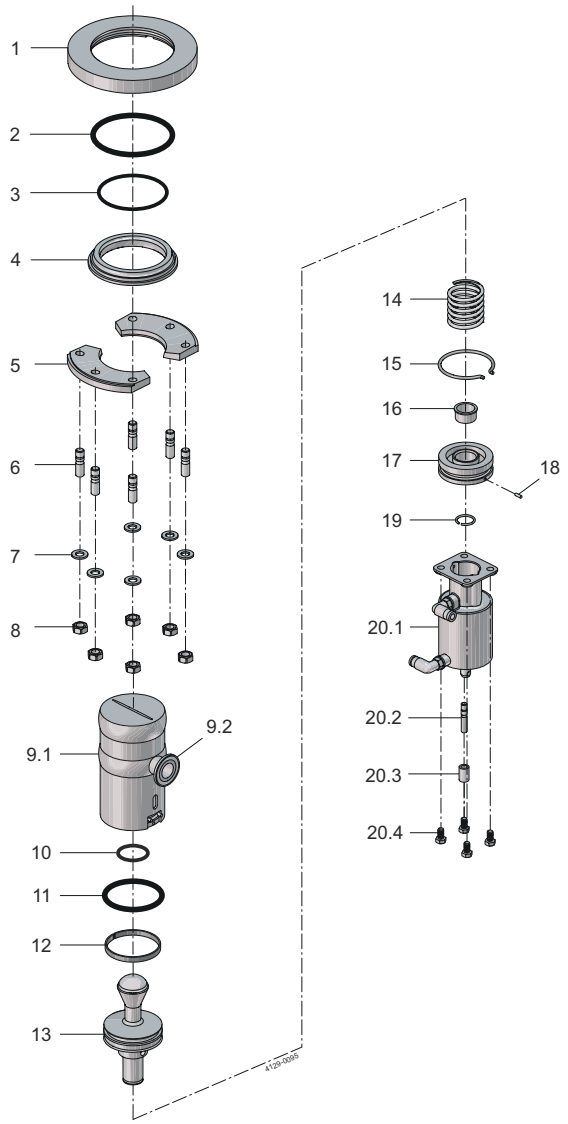

Pos.	Qty.	Denomination	Pos.	Qty.	Denomination
1	1	Weld plate	12	1	Guide ring
2	1	O-ring	13	1	Piston
3	1	O-ring	14	1	Spring
4	1	Adapter	15	1	Retaining ring
5	2	Locking ring	16	1	Bushing
6	6	Stud	17	1	End plate
7	6	Washer	18	1	Positioning pin
8	6	Nut	19	1	Retaining ring
9.1	1	Body	20.1	1	PlusClean Actuator
9.2	1	Inlet	20.2	1	Connecting stud
10	1	O-ring	20.3	1	Actuator spacer
11	1	O-ring	20.4	4	Screw

10.3 Accessories and Tools

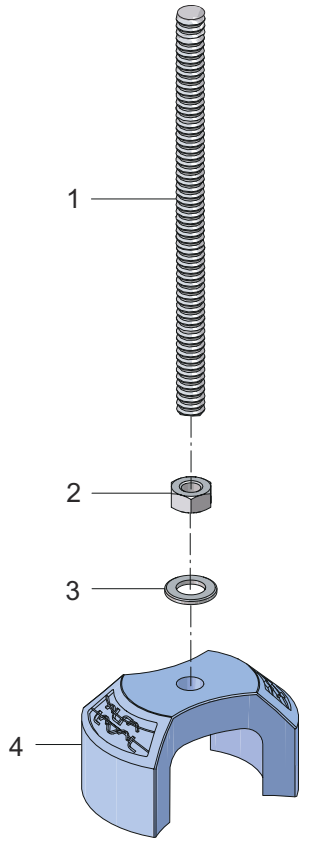

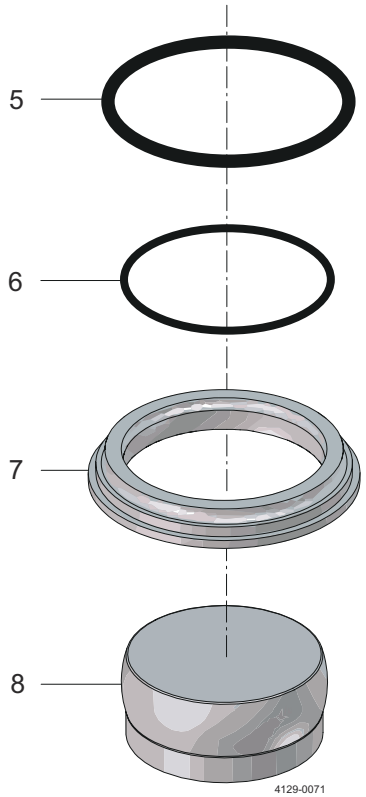

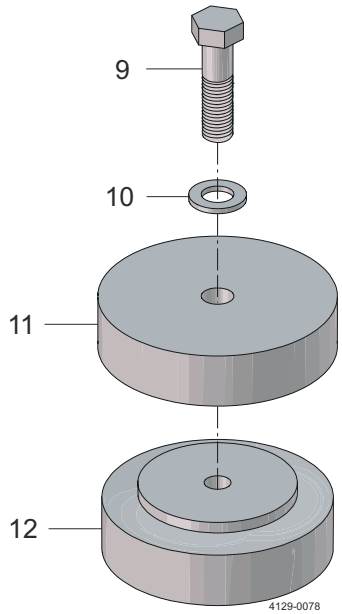

Pos.	Qty.	Denomination	Pos.	Qty.	Denomination
1	1	Screw	7	1	Adapter
2	1	Nut	8	1	Blind cap
3	1	Washer	9	1	Screw
4	1	Spring mounting tool	10	1	Washer
5	1	O-ring	11	1	Heatsink, outside
6	1	O-ring	12	1	Heatsink, inside

This page is intentionally left blank.

11 Appendix

11.1 Weld Plate Installation

WARNING

Pay special attention to the instructions below so that severe personal injury and/or damage to the weld plate and device is avoided.

Always read this Instruction manual thoroughly.

Install the device only when the tank is depressurized and cooled down.

This device may only be installed by qualified technical personnel who has read and understood the Instruction Manual!

NOTE

To ensure a hygienic weld (avoid or remove discoloration) it is recommended to use either shielding gas or pre-treatment of the welding zone. Weld plate thickness at welding zone is 15 mm (0.6") for the fixed weld plate and 18 mm (0.7") for the adjustable weld plate.

Incorrect welding procedures may deform and warp the weld plate - therefore it is recommended to use the HeatSink Kit without O-rings during welding to dissipate heat from the welding area, see *Accessories and Tools* on page 79. A deviation of ±0.5 mm (0.02") across the inner diameter (see *Figure 2: Deviation tolerance*) is considered within acceptable limits.

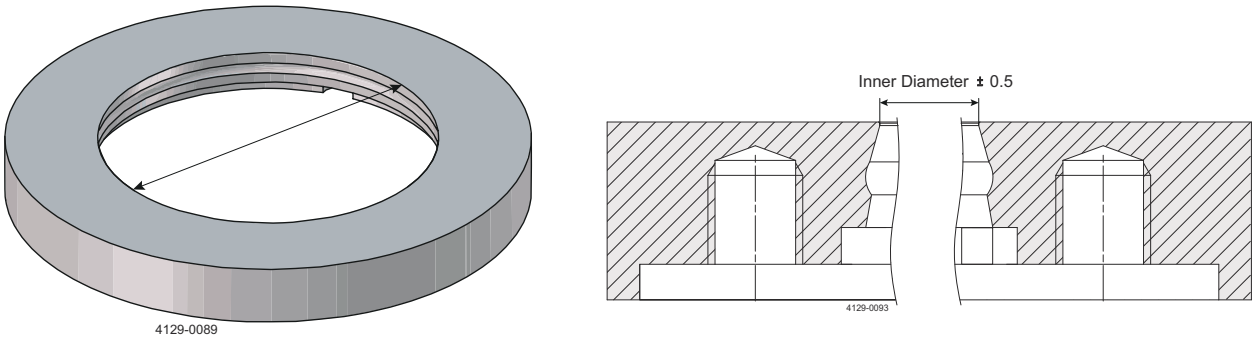

Figure 2: Deviation tolerance

1. Cut a hole in the tank sized to the diameter of the weld plate (the gap between the hole and weld plate must be as small as possible).
2. Chamfer the outer edges by 45 degrees, leaving a 1-2 mm (0.039"-0.078") opening with the original diameter toward the inside of the tank.

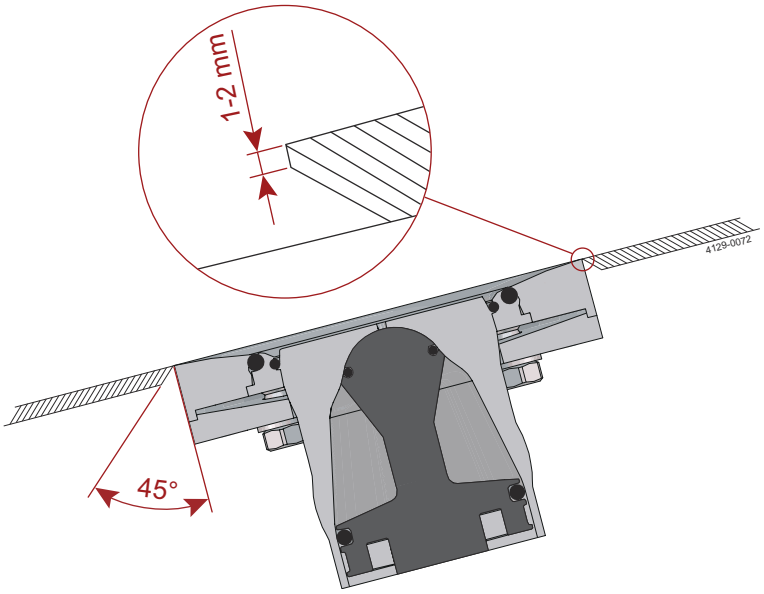

3. Align the inside of the weld plate with the inside of the tank surface. When mounting the weld plate always have the thread holes in the position such that the machine is drainable when installed. Refer to *Mounting* on page 34 for machine drain ability information.

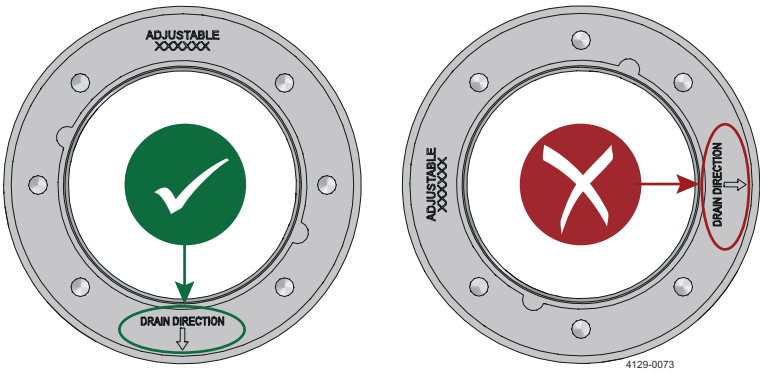

Figure 3: Draining direction

4. Using appropriate filler, tack weld the weld plate to the tank in positions 1 and 2 from inside of the tank as shown (Image 1). Ensure the weld plate is level; adjust if needed, and then tack weld it at positions 3 and 4. Ensure the weld zone is cooled down with compressed air between each point.
5. Continue tack welding the weld plate at positions 5 through 8, (from inside of the tank as shown (Image 2)).
6. Allow the weld plate and welded areas to cool, using compressed air to speed the process as needed. Do not quench with water, as this may cause warping due to material shrinkage.
7. Weld between positions 3 and 4 from the outside (Image 3), and then cool the welded section using compressed air. Continue welding between the tack weld points 3 and 4 in opposite direction. Ensure that the welded sections are cooled down with compressed air after each welding.
8. Allow the region to cool, then repeat step 7 from inside of the tank, if possible.

9. Once the welding is complete, allow the weld plate to cool completely to room temperature. Do not quench the area with water, in order to avoid material warping.

10. Finish the inside of the tank (and the outside, if desired) by grinding and polishing until flush with the wall. Be sure to allow the area to cool between grinding and polishing.

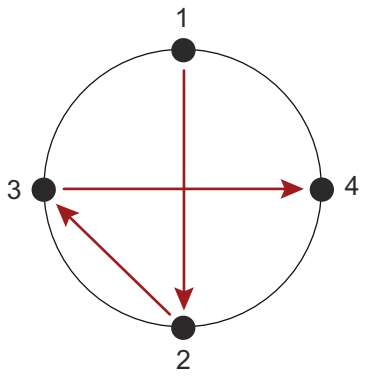

Image 1

From inside of the tank

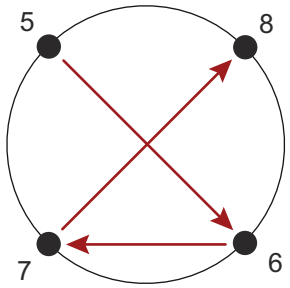

Image 2

From inside of the tank

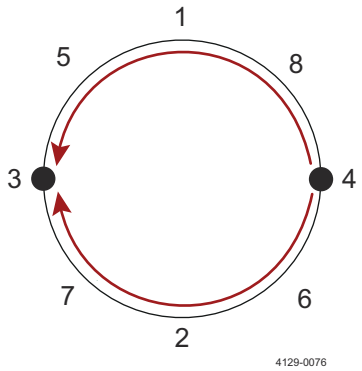

Image 3

First from outside of the tank, then from inside of the tank