Alfa Laval PlusClean®

Wall mounted cleaning nozzles

Introduction

Alfa Laval PlusClean® is a wall mounted cleaning nozzle designed for cleaning of shadow areas in tanks; e.g. below agitator blades and other tank internals. Alfa Laval PlusClean® is smoothly integrated into the tank wall. When activated during Cleaning-in-Place (CIP), Alfa Laval PlusClean® covers cleaning shadow areas with a high impact fan of cleaning media, giving the market's first guarantee of 100% impact cleaning coverage.

Application

There is a broad range of applications within hygiene-critical industries such as food, beverage, dairy and pharmaceutical industries, but likewise applications such as personal care, home care and less hygiene critical applications. Alfa Laval PlusClean® is the key to ensure high product yield by eliminating any risk of contamination. This is done by targeting cleaning media to the shadow zones for reinforced hygienic tank cleaning. Alfa Laval PlusClean® is optimal for installation in all tank types and tank sizes with highest hygienic tank cleaning requirements to ensure high product quality.

Benefits

- High product yield with 100% cleaning coverage guarantee
- Low cleaning media consumption
- Installed flush with the tank wall, allowing the unit to be used in tanks with frame type agitators
- Easy to install using the patented adjustable flange connection
- Hygienic design
- Option for actuator & ThinkTop control unit

Available versions

- Alfa Laval PlusClean® media driven
- Alfa Laval PlusClean® air driven by a pneumatic actuator

Standard design

The Alfa Laval PlusClean® is available as standard with all wetted stainless-steel components manufactured from AISI 316L. O-rings are made from EPDM and FPM (FKM). The choice of slot (spray pattern) can optimize spray impact length and flow rate at the desired pressure.



Certificates

- Q-Doc
- ATEX/UKEx/IECEx

Q-doc applicable to product contact parts only.

Working principle

Alfa Laval PlusClean® operates based on a spring activated piston and is available in media or pneumatic driven versions and can thus be activated from either the cleaning media or controlled air pressure. When activated, Alfa Laval PlusClean® sprays a high impact fan of cleaning media directly to the soiled area. Cleaning coverage is ensured through controlled and repeated rotation of the device, e.g. agitator blades, through the spray fan. When cleaning is completed the piston position is restored by the integrated spring mechanism and the cleaning device is securely closed and sealed off. If purging is needed, always operate with actuator. Alfa Laval PlusClean® operates perfectly together with the primary top mounted cleaning device, whether it is a static spray ball, rotary spray head or a rotary jet head type cleaning device.

Technical data

Technical data	
Product wetted surface finish:	Ra 0.8 µm / Ra 32 µin
Wetting distance:	Maximum 7.4 m / 24.3 ft
Impact cleaning distance:	Maximum effective 5.4 m / 17.9 ft

Pressure	
CIP working pressure:	1.9 - 7 bar / 27.6 - 101.5 PSI
Recommended CIP pressure:	2 - 5 bar / 29.0 - 72.5 PSI
Tank pressure range:	Media driven: -1 to 4 barg / -14.5 to 58 PSI
	Air driven: -1 to 6 barg / -14.5 to 87 PSI

Spray pattern

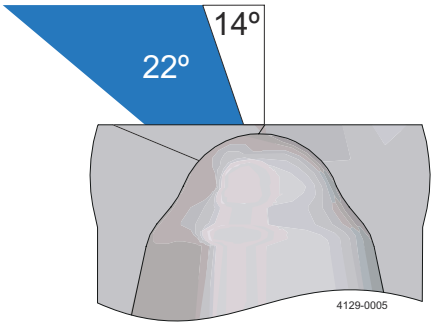

Offset Slot

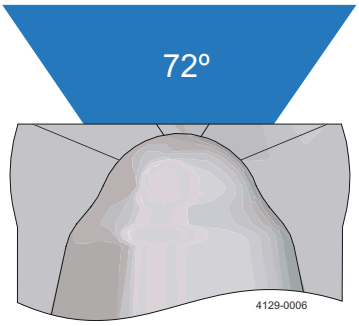

Wide Center Slot

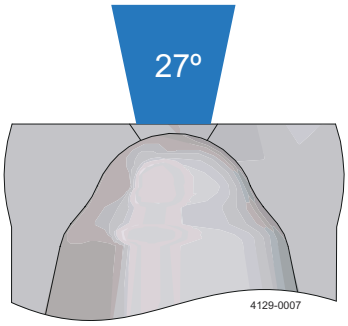

Narrow Center Slot

Physical data

Materials (media contact parts)	
Components:	AISI 316L
O-rings:	EPDM, FPM (FKM)
Guide ring:	PTFE

Temperature	
Maximum cleaning fluid temperature:	95 °C / 203 °F
Maximum tank temperature:	150 °C / 302 °F

Weight	
Weight:	Media driven: 2.1 kg / 4.6 lbs
	Pneumatic driven: 2.7 kg / 6 lbs

Connections	
Cleaning media connection:	Clamp connection: ASME BPE – L14AM-0.75 / DIN32676 Reihe A DN15
Air connections for actuator:	ISO 288/ G ⅛" internal thread fitted as standard

Mounting options

Alfa Laval PlusClean® has 2 types of weld plates: Adjustable weld plate and fixed weld plate.

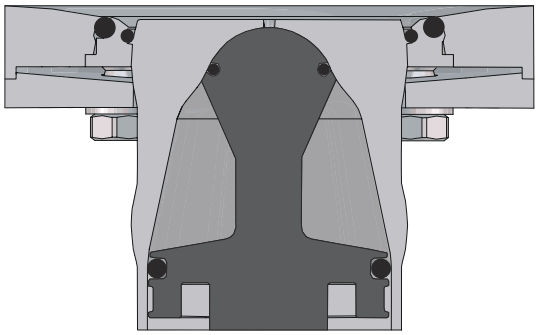

Adjustable weld plate

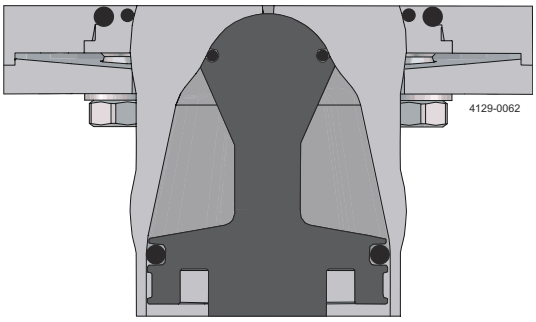

Fixed weld plate

The adjustable weld plate has a curved surface on the tank side of the weld plate and allows adjusting the angle of the cleaning nozzle ±5° from the center along all 3 axes. It is drainable only when installed at an angle more than 45°. The adjustable weld plate should be used in applications where the Alfa Laval PlusClean® is installed on tank walls and tank bottoms with more than 45° inclination to horizontal.

The fixed weld plate only allows the device to rotate around Z-axis. It is drainable at all angles due to the flat top surface.

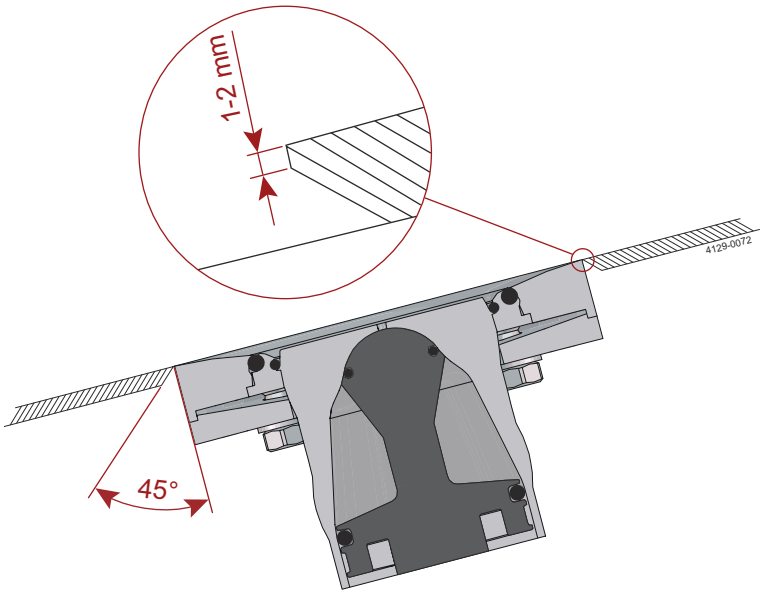

Performance data

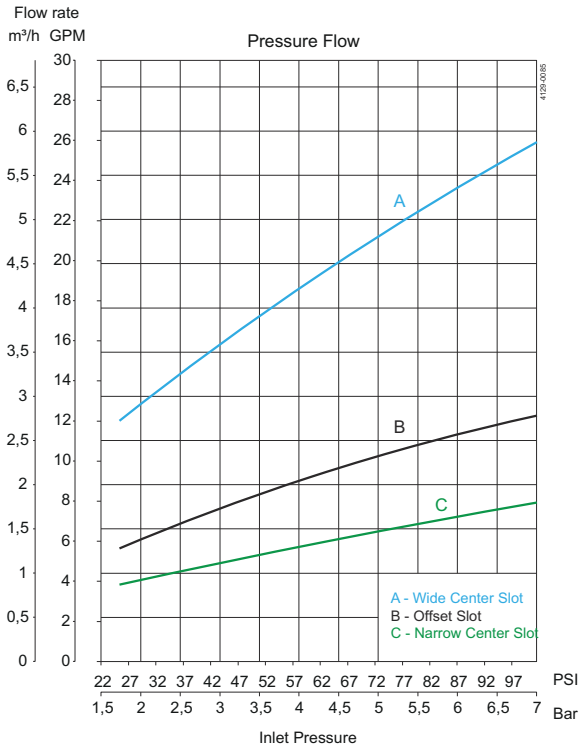

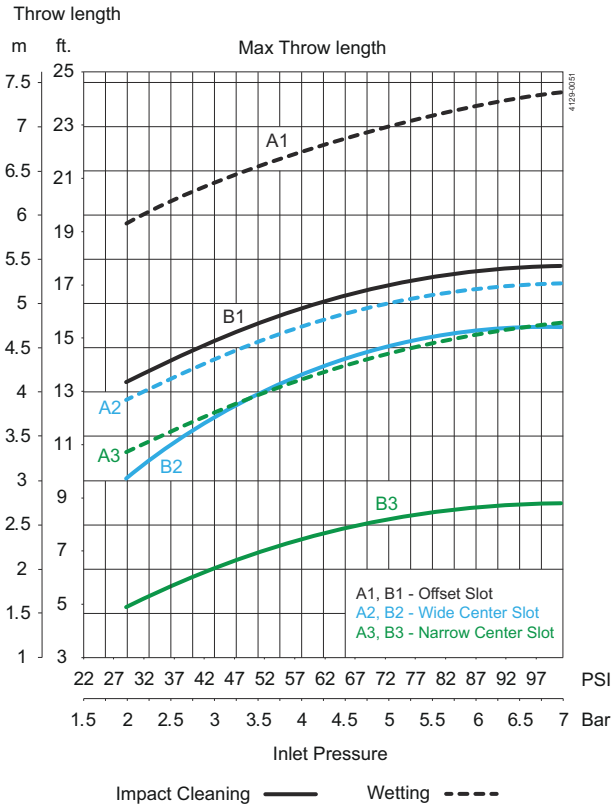

Qualification documentation

Documentation specification

ATEX/UKEx/ IECEx	ATEX/UKEx/IECEx approved machine for use in explosive atmospheres INSIDE MACHINE: Category 1 for installation in zone 0/20 OUTSIDE MACHINE: Safe area only II 1G/- Ex h IIC 85°C...188°C Ga/- II 1D/- Ex h IIIC T85°C...T140°C Da/-

Q-doc	Equipment Documentation includes: • EN 1935/2004 DoC • EN 10204 type 3.1 Certificate and DoC • FDA DoC • GMP EC 2023/2006 DoC • EU 10/2011 DoC • ADI DoC • QC DoC

Dimensions

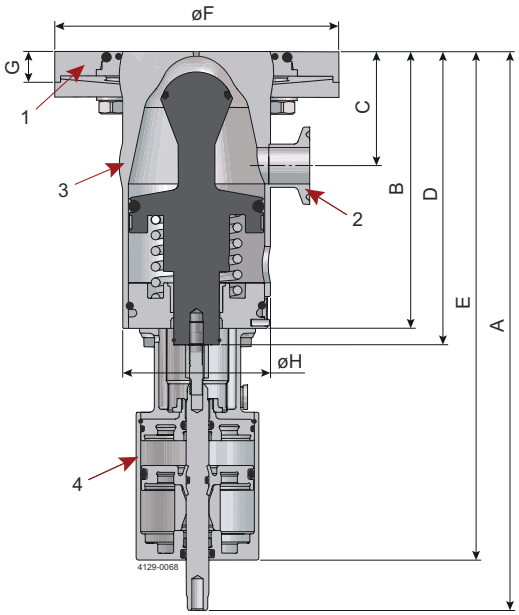

1. Tank connection
2. Inlet connection for cleaning media: 3/4" Clamp
3. Alfa Laval PlusClean®
4. Pneumatic Actuator

A-H see tables below

Media driven

mm / inch

Stroke	A	B	C	D	E	F	G		H	Weight
							Adjustable weld plate	Fixed weld plate		
10.9 / 0.4	NA	122 / 4.8	50.5 / 2.0	132 / 5.2	NA	130 / 5.1	18 / 0.7	15 / 0.6	65 / 2.6	2.1 kg / 4.6 lbs

Pneumatic driven

mm / inch

Stroke	A	B	C	D	E	F	G		H	Weight
							Adjustable weld plate	Fixed weld plate		
10.9 / 0.4	246.5 / 9.7	122 / 4.8	50.5 / 2.0	132 / 5.2	224 / 8.8	130 / 5.1	18 / 0.7	15 / 0.6	65 / 2.6	2.7 kg / 6.0 lbs

This document and its contents are subject to copyrights and other intellectual property rights owned by Alfa Laval AB (publ) or any of its affiliates (jointly "Alfa Laval"). No part of this document may be copied, reproduced or transmitted in any form or by any means, or for any purpose, without Alfa Laval's prior express written permission. Information and services provided in this document are made as a benefit and service to the user, and no representations or warranties are made about the accuracy or suitability of this information and these services for any purpose. All rights are reserved.

How to contact Alfa Laval

Up-to-date Alfa Laval contact details for all countries are always available on our website at www.alfalaval.com