ThinkTop

V20

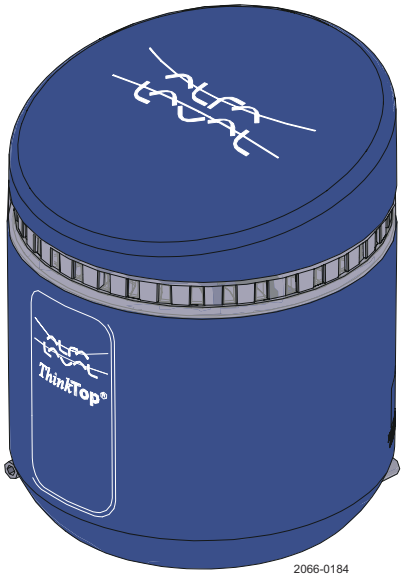

Lit. Code 200008387-2-EN-GB
Manual No. 100008401

Instruction Manual

BRITISH ENGLISH

Published by
Alfa Laval Kolding A/S
Albuen 31
DK-6000 Kolding, Denmark
+45 79 32 22 00

The original instructions are in English

© Alfa Laval Corporate AB 2025-09

This document and its contents are subject to copyrights and other intellectual property rights owned by Alfa Laval Corporate AB. No part of this document may be copied, re-produced or transmitted in any form or by any means, or for any purpose, without Alfa Laval Corporate AB's prior express written permission. Information and services provided in this document are made as a benefit and service to the user, and no representations or warranties are made about the accuracy or suitability of this information and these services for any purpose. All rights are reserved.

Contents

1 EU Declaration of Conformity 5

2 UK Declaration of Conformity 7

3 About ThinkTop 9

3.1 About this manual 9

4 Installation 11

4.1 Mechanical installation 12

4.2 Electrical installation 13

5 Setup 15

5.1 Unassisted setup 15

5.2 Manual setup 16

5.3 Reset 17

6 Troubleshooting 19

7 Spare parts 21

1 EU Declaration of Conformity

The Designated Company

Alfa Laval Kolding A/S, Albuen 31, DK-6000 Kolding, Denmark, +45 79 32 22 00

Company name, address and phone number

Hereby declare that

Top Unit for Valve Indication

Designation

ThinkTop V20

Type

Serial number from 0 to 10.000.000

is in conformity with the following directives with amendments:

- EMC Directive 2014/30/EU
- RoHS Directive 2011/65/EU and amendments

The person authorised to compile the technical file is the signer of this document.

Title	Name
Global Product Quality Manager	Lars Kruse Andersen

Place	Date (YYYY-MM-DD)	Signature
Kolding, Denmark	2022–11–01	

2 UK Declaration of Conformity

The Designated Company

Alfa Laval Kolding A/S, Albuen 31, DK-6000 Kolding, Denmark, +45 79 32 22 00

Company name, address and phone number

Hereby declare that

Top Unit for Valve Indication

Designation

ThinkTop V20

Type

Serial number from 0 to 10.000.000

is in conformity with the following directives with amendments:

- The Electromagnetic Compatibility Regulations 2016
- The Restriction of the Use of Certain Hazardous Substances in Electrical and Electronic Equipment Regulations 2012

Signed on behalf of: Alfa Laval Kolding A/S

Title	Name
Global Product Quality Manager	Lars Kruse Andersen

Place	Date (YYYY-MM-DD)	Signature
Kolding, Denmark	2022–11–01	

DoC Revision_01_112022

3 About ThinkTop

ThinkTop V20 is a valve-top surveillance unit that provides surveillance of valves during the fluid handling process. The surveillance unit has been developed with user friendliness and robustness in mind.

ThinkTop V20 comes with a valve surveillance sensor board for connection to any PLC system. There are three types of communication interfaces available:

Digital I/O 24 VDC, AS-Interface V3.0, and IO-Link.

The ThinkTop V20 detects valve position through a sensor target attached to the valve stem through a touch-free sensor system The position is then evaluated and if valid, the corresponding feedback is returned to the automation system via the communication interface.

V20, V50 and V70 series

ThinkTop comes in three series: V20, V50 and V70. The V20 series is the option for when all you need is sensing. The V50 series is the compact option with a feature set tailored to valves that require only one solenoid valve such as butterfly and single seat valves. The V70 series is the more flexible option that can be configured to meet the needs of the most demanding valve applications such as mixproof valves.

3.1 About this manual

In this manual, you will find detailed descriptions of how to install and setup the ThinkTop V20 as well as detailed information about fault finding and maintenance. We recommend that you familiarize yourself with the content of the manual before you begin installation.

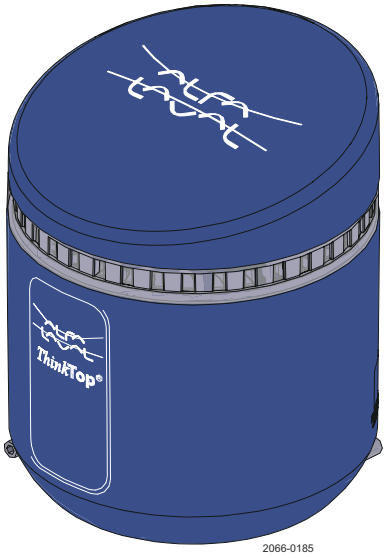

4 Installation

This chapter covers the installation of ThinkTop V20 on any Alfa Laval rising stem valve.

Tools

To carry out the installation, you need the following tools:

Hex key

2.5 mm

Adjustable spanner or flat wrenches

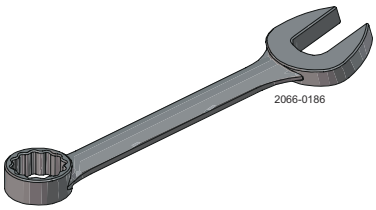

14 mm

4.1 Mechanical installation

Mechanical installation is a two-step process, where you mount the sensor target to the actuator stem and the ThinkTop to the actuator top.

1. Fit the yellow sensor target to the actuator stem.

   Tighten the sensor target by hand or use a 22 mm spanner (1...2 Nm)

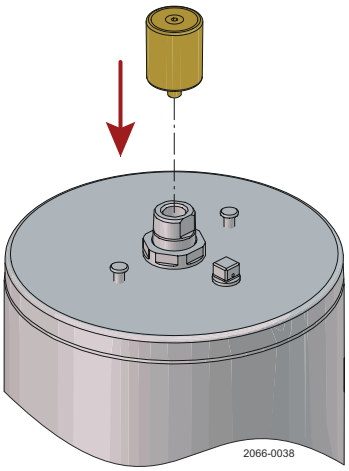

2. Mount the ThinkTop centred and flat against the actuator top.

   Hold the ThinkTop flat and steady against the actuator top.

   Use a 2.5 mm hex key to lightly tighten one of the two set screws.

   Tighten the first set screw (1...1.5 Nm).

   Tighten the second set screw (1...1.5 Nm).

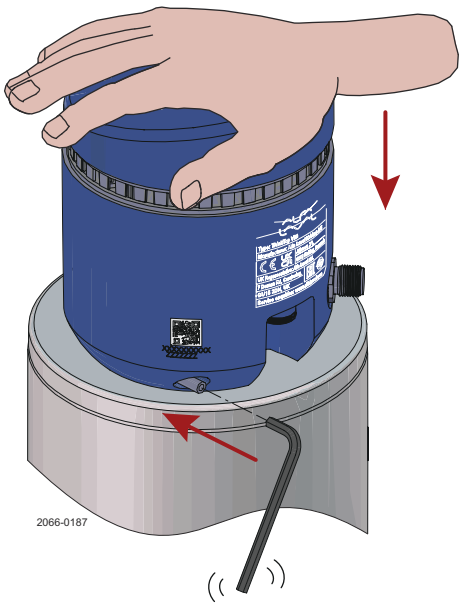

4.2 Electrical installation

1. Fit the cable to the M12 connector and tighten it using a 14 mm wrench (0.6...1.5 Nm).

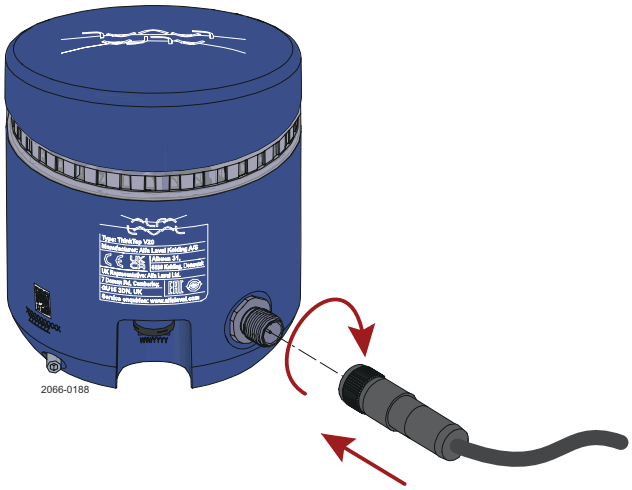

Wiring diagrams

V20 Digital-IO 24V

Control Board		Colour code	M12 plug pin
24V	Power supply	BN (brown)	Pin: 1
Valve de-energised (DE-EN)	out (PLC in)	WH (white)	Pin: 2
GND	Power supply	BU (blue)	Pin: 3
Main valve energised (EN)	out (PLC in)	BK (black)	Pin: 4

V20 AS-Interface

Control Board		Colour code	M12 plug pin
ASi +	ASi supply	BN (brown)	Pin: 1
ASi –	ASi supply	BU (blue)	Pin: 3

V20 IO-Link

Control Board		Colour code	M12 plug pin
L + 24V	Power supply	BN (brown)	Pin: 1
L – GND	Power supply	BU (blue)	Pin: 3
IO-Link	Signal	BK (black)	Pin: 4

V20 Digital-IO 24V Retrofit

Control Board		Colour code	M12 plug pin
GND	Power supply	BN (brown)	Pin: 1
Main valve energised (EN)	out (PLC in)	WH (white)	Pin: 2
Valve de-energised (DE-EN)	out (PLC in)	BU (blue)	Pin: 3
24V	Power supply	BK (black)	Pin: 4

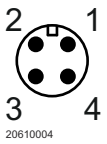

M12 option (4-pin A-coded plug)

5 Setup

If open/closed feedback is desired, manual setup as shown in section 5.2 is required on normally open (NO) valves.

5.1 Unassisted setup

The recommended setup is letting the V20 setup on its own during IO-testing.

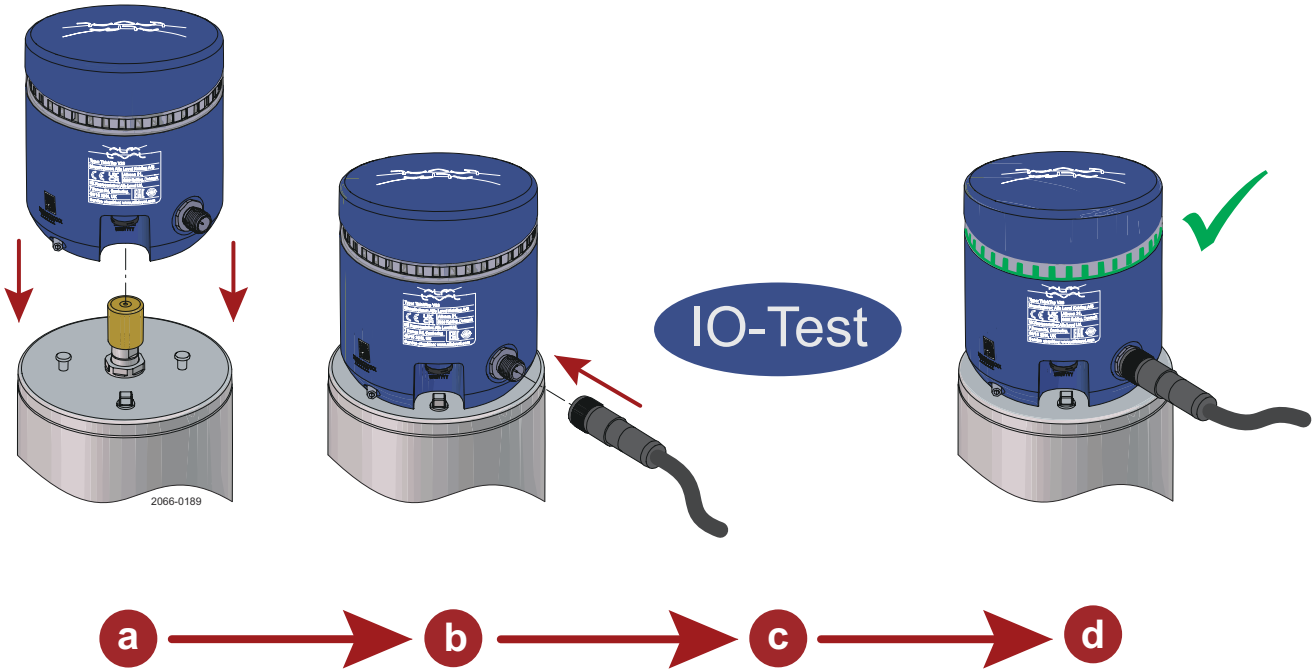

a = Mechanical installation

b = Electrical installation

c = IO-test

d = Correct setup

5.2 Manual setup

1. Perform mechanical installation as shown in section 4.1

2. Move valve to the initial position

   The initial position is the position to be associated with the valve De-energized signal. **If open / closed feedback is desired**, the initial position should be the valves closed position. **For NO valves DE-EN is not the closed position.**

3. Perform electrical installation as shown in section 4.2

4. **Observe green flashing**

5. Move the valve to the opposite of its initial position

6. **Observe white light** [Energized position feedback]

7. Move the valve back to its initial position

8. **Observe green light** [De-energized position feedback]

   Setup is now complete

9. Run an IO-test to verify that the system returns the desired feedback

   NOTE

   Setup can be cancelled at any step before step 8 by removing power from the ThinkTop.

5.3 Reset

To reset the ThinkTop V20, remove the ThinkTop V20 from the valve and lift it away from the sensor target while the ThinkTop V20 is still powered.

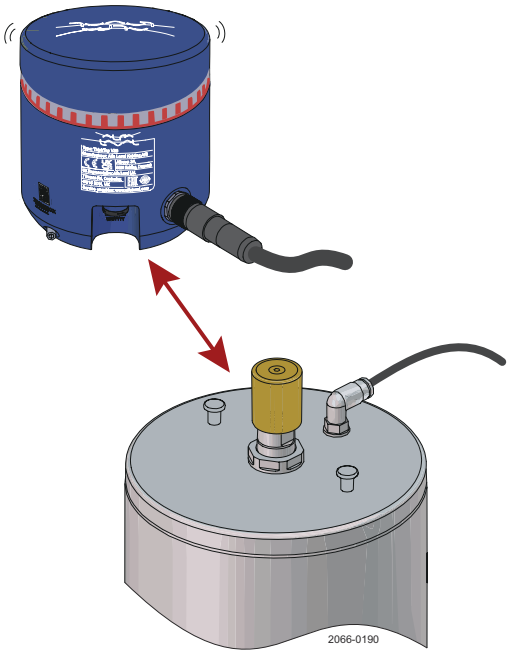

When the ThinkTop flashes red it has been reset and the ThinkTop V20 is ready for setup.

6 Troubleshooting

Red flashing

If the ThinkTop V20 is flashing red, it is an indication that the sensor target is missing:

- Verify that the yellow sensor target is mounted correctly

Missing feedback

If no light or signal to the PLC is present:

- Check your cables and your power supply.
- Verify that the valve is operating correctly
- Verify that the sensor target is not loose.

Incorrect feedback

If you are not receiving correct feedback:

- Verify that the valve is operating correctly.
- Verify that the air supply / remote solenoid valve is working correctly.
- If feedback from the ThinkTop V20 is opposite what it should be, perform a reset as shown in section 5.3, remove power from the ThinkTop then choose the appropriate setup from section 5.

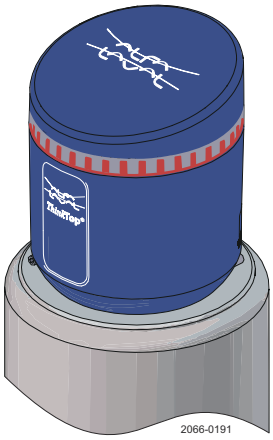

7 Spare parts

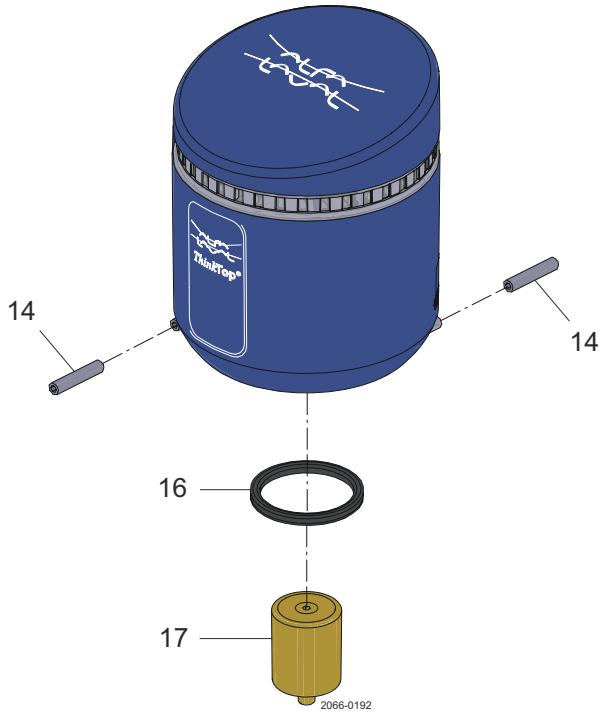

Pos	Qty	Denomination	
14	2	Set screw, Hex 2,5	9611996070
16	1	Lip seal	8010005584
17	1	Sensor target	9615397601

NOTE

Further information can be found in the product catalogue “Close at Hand”, under accessories.