Unique SSV ATEX - Standard and Reverse Acting

Single seat valves

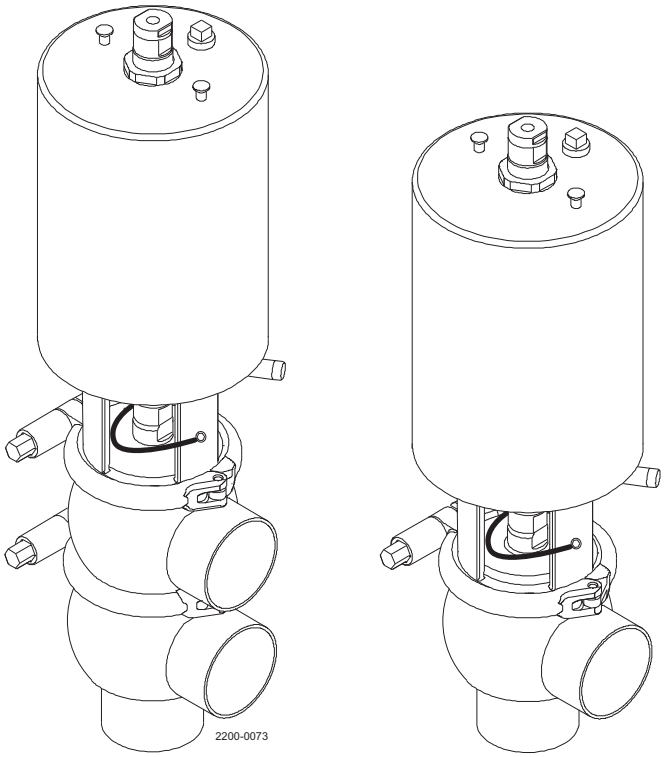

Lit. Code 200008021-4-EN-GB

Instruction Manual

British English

Published by
Alfa Laval Kolding A/S
Albuen 31
DK-6000 Kolding, Denmark
+45 79 32 22 00

The original instructions are in English

© Alfa Laval AB 2026-10

This document and its contents are subject to copyrights and other intellectual property rights owned by Alfa Laval AB (publ) or any of its affiliates (jointly "Alfa Laval"). No part of this document may be copied, re-produced or transmitted in any form or by any means, or for any purpose, without Alfa Laval's prior express written permission. Information and services provided in this document are made as a benefit and service to the user, and no representations or warranties are made about the accuracy or suitability of this information and these services for any purpose. All rights are reserved.

Contents

1 Declarations of Conformity 5

2 Safety 9
- 2.1 Safety Signs 10
- 2.2 Safety Precautions 12
- 2.3 Important Information 16
- 2.4 Warning Signs in Text 17
- 2.5 Requirements of personnel 18
- 2.6 Recycling information 19

3 Introduction 21
- 3.1 ATEX Classification 21

4 Installation 23
- 4.1 Unpacking/delivery 23
- 4.2 General installation 25
- 4.3 Welding 28

5 Operation 31
- 5.1 Operation 31
- 5.2 Troubleshooting 33
- 5.3 Recommended Cleaning 34
  - 5.3.1 Cleaning 35

6 Maintenance 37
- 6.1 General maintenance 37
- 6.2 Dismantling the valve 39
- 6.3 Plug Seal Replacement (Elastomer) 42
  - 6.3.1 Removal of Plug Seal 42
  - 6.3.2 Pre-mounting of plug seal 42
  - 6.3.3 Mounting plug seal by hand 43
  - 6.3.4 Mounting plug seal with Alfa Laval plug seal tool 44
- 6.4 Plug Seat Ring Replacement (TR2 and TR3) 46
- 6.5 Valve Assembly 46
- 6.6 Actuator 47
- 6.7 Actuator Bushing Replacement (Non-maintainable Actuator) 48

7 Technical Data 53
- 7.1 Technical Data 53
- 7.2 Physical Data 53

8 Spare parts....55
8.1 Ordering spare parts....55
8.2 Alfa Laval service....55
8.3 Warranty - Definition....56

9 Parts lists and exploded views....57
9.1 Drawing — Unique Single Seat Valve — ATEX....57
9.2 Unique Single Seat Valve — ATEX — shut-off....58
9.3 Unique Single Seat Valve — ATEX — change-over....59
9.4 Drawing Unique Single Seat Valve — ATEX — Reverse Acting....60
9.5 Unique Single Seat Valve — ATEX — Reverse Acting — shut-off....61
9.6 Unique Single Seat Valve — ATEX — Reverse Acting — change-over....62

1 Declarations of Conformity

EU Declaration of Conformity

The designated company

Alfa Laval Kolding A/S, Albuen 31, DK-6000 Kolding, Denmark, +45 79 32 22 00

Company name, address and phone number

Hereby declare that

Valve

Designation

Unique SSV PN10

Type

1000000-70000000000, AAX000000001-AAX999999999, AAB000000001-AAB999999999, ABJ000000001-ABJ999999999.

Serial number

is in conformity with the following directives with amendments:

- Machinery Directive 2006/42/EC
- Pressure Equipment Directive (PED) 2014/68/EU
- ATEX Directive 2014/34/EU

Technical file ref. 9612-9606. Baseefa (1180)

Marking: Ex II 2 G D c T4

The person authorised to compile the technical file is the signer of this document.

Vice President Business Unit Hygienic Fluid Handling and Heat Transfer Technologies, Head of Product Management	Mikkel Nordkvist
Title	Name
Kolding, Denmark	2025-05-01
Place	Date (YYYY-MM-DD)

Signature

DoC Revison_ 01_052025 / This Declaration of Conformity replaces Declaration of Conformity dated 2022-11-07

EU Declaration of Conformity

The designated company

Alfa Laval Kolding A/S, Albuen 31, DK-6000 Kolding, Denmark, +45 79 32 22 00

Company name, address and phone number

Hereby declare that

Valve

Designation

Unique SSV PN10

Type

1000000-70000000000, AAX000000001-AAX999999999, AAB000000001-AAB999999999, ABJ000000001-ABJ999999999.

Serial number

is in conformity with the following directives with amendments:

- Regulation (EU) 2023/1230 on machinery
- Pressure Equipment Directive (PED) 2014/68/EU
- ATEX Directive 2014/34/EU

Technical file ref. 9612-9606. Baseefa (1180)

Marking: II 2 G D c T4

The person authorised to compile the technical file is the signer of this document.

Vice President Business Unit Hygienic Fluid Handling and Heat Transfer Technologies, Head of Product Management	Mikkel Nordkvist
Title	Name
Kolding, Denmark	2027-01-20
Place	Date (YYYY-MM-DD)

DoC Revison_02_012027

UK Declaration of Conformity

The designated company

Alfa Laval Kolding A/S, Albuen 31, DK-6000 Kolding, Denmark, +45 79 32 22 00

Company name, address and phone number

Hereby declare that

Valve

Designation

Unique SSV PN10

Type

1000000-70000000000, AAX000000001-AAX999999999, AAB000000001-AAB999999999, ABJ000000001-ABJ999999999.

Serial number

is in conformity with the following directives with amendments:

- The Supply of Machinery (Safety) Regulations 2008
- The Pressure Equipment (Safety) Regulations 2016
- The Equipment and Protective Systems Intended for use in Potentially Explosive Atmospheres Regulations 2016

Technical file ref. 9612-9606. Baseefa (1180)

Marking: Ex II 2 G D c T4

Signed on behalf of: Alfa Laval Kolding A/S.

Vice President Business Unit Hygienic Fluid Handling and Heat Transfer Technologies, Head of Product Management		Mikkel Nordkvist
Title		Name
Kolding, Denmark	2025-05-01	
Place	Date (YYYY-MM-DD)	Signature

DoC Revison_02_052025

This page is intentionally left blank.

2 Safety

Read this first





This Instruction Manual is designed for operators and service engineers working with the supplied Alfa Laval product.

Operators must read and understand the ***Safety, Installation and Operating*** instructions of the supplied Alfa Laval product before carrying out any work or before you put the supplied Alfa Laval product into service!

Not following the instructions can result in serious accidents.

This documentation describes the authorized way to use the supplied Alfa Laval product. Alfa Laval will take no responsibility for injury or damage if the equipment is used in any other way.

This Instruction Manual is designed to provide the user with the information to perform tasks safely for all phases in the lifetime of the supplied Alfa Laval product.

The operator shall always read the chapter ***Safety*** first. Hereafter the operator can skip to the relevant section for the task to be carried out or for the information needed.

Always read the chapter ***Technical Data*** thoroughly.

This is the complete Instruction Manual for the supplied Alfa Laval product.

NOTE

The illustrations and specifications in this Instruction Manual were effective at the date of printing. However, as continuous improvements are our policy, we reserve the right to alter or modify the Instruction Manual without prior notice or any obligation.

The English version of the Instruction Manual is the original manual. Alfa Laval cannot be held responsible for incorrect translations. In case of doubt, the English version applies.

2.1 Safety Signs

Mandatory Action Signs

	General mandatory action sign.
	Refer to instruction manual.
	Use eye protection - safety glasses.
	Use protective hand wear - safety gloves.
	Wear protective equipment - safety helmet.
	Use ear protection in noisy environments - noise protector.
	Wear protective equipment - safety shoes.

Warning Signs

	General warning.
	Transportation with forklift truck or other industrial vehicles if heavy.
	Hot surface and Burn Hazard.
	Cutting danger.
	Corrosive substance.
	Crushing of hands.
	Danger of injury (lasermarked on the actuator). Do **not** attempt to disassemble the actuator due to spring under load danger! (The lock wire opening is blocked).
	Danger of injury (lasermarked on the actuator). Do **not** attempt to cut open actuator due to spring under load danger! (The lock wire opening is blocked).
	Danger of injury (label marked on actuator). Do **not** attempt to cut the actuator open due to spring under load (the lock wire opening is locked).

2.2 Safety Precautions

All warnings in the Instruction Manual are summarised on these pages. Pay special attention to the instructions below so that severe personal injury and/or damage to the supplied Alfa Laval product is avoided.

General

	To prevent unexpected start and contact with electrical live and moving parts. **Always** disconnect the power supply and air supply safely: • The power supply disconnecting device and air supply must be disconnected (in off position) and locked.

Transportation and Lifting

	**Never** lift or elevate in any way other than described in this manual. **Always** use the original packaging or similar during transportation. **Always** ensure that personnel must have experience with lifting operations. **Always** ensure that all connections are disconnected before attempting to remove the valve from the installation. **Always** ensure that no leakage of lubricants can occur. **Always** drain liquid out of the valves before transportation. **Always** ensure sufficient fixing of the valve during transportation - if specially designed packaging material is available, it must be used. **Always** ensure that compressed air is released.
	**Always** use designated lifting points if defined. Ensure that the lifting equipment is suitable for the supplied Alfa Laval product. **Always** ensure that the unit is securely fixed during transportation. **Always** ensure the lifting point to be in line with center of gravity. Adjust lifting point if necessary. **Always** use appropriate lifting equipment for heavy parts when relevant. Use lifting logs when available. **Always** keep an eye on the load and stay clear during the lifting operation.

Installation

	If the local safety regulations prescribe that the installation has to be inspected and approved by responsible authorities before the valve is put into service, consult with such authorities before installing the equipment and have the projected installation approved by them. **Always** release compressed air after use. **Always** assemble the valve completely before startup and make sure everything is in place and correctly tightened.
  	**Never** work on the valve or touch moving parts if the actuator is supplied with compressed air. **Always** ensure that the valve and pipelines are depressurized, emptied, and cooled down to ambient temperature before installation, inspection, assembly, or dismantling of the valve. **Never** touch the valve or the pipelines when processing hot liquids or when sterilising.
  	Do **NOT** attempt to disassemble or by other means open the actuator due to spring under load danger!

Operation

	Always read ***Technical Data*** thoroughly. **Never** operate the valve unless a correct installation has been verified. **Never** dismantle the valve during operation or when pressurized.
	**Never** touch the valve or pipelines when hot.
	**Always** rinse well with clean water after cleaning. **Always** handle lye and acid with great care. **Always** follow the instructions in the safety data sheets from the suppliers of cleaning agents, detergents, oils etc.
	**Never** touch moving parts of the valve during operation. **Always** release compressed air after use. **Never** touch the moving parts if the actuator is supplied with compressed air.

Maintenance



In order to optimise the operation of the supplied Alfa Laval product and to minimize the down time due repair activities, the maintenance includes:

- Inspection and maintenance of the supplied Alfa Laval product: strictly follow the technical documentation
- **Preventive maintenance:** visual inspection of the supplied Alfa Laval product followed by necessary adjustments and planned periodic replacement of wear and tear parts
- **Repairs:** unscheduled break down of a component, often causing the system to stop. Damaged components must be replaced
- **Stock of Alfa Laval genuine spare parts:** Alfa Laval recommend keeping a stock of genuine spare parts facilitating preventive maintenance and reducing downtime in case of unplanned break downs





Always use Alfa Laval genuine spare parts.

Always release compressed air after use.

Always ensure that the valve and pipelines are depressurized, emptied, and cooled down to ambient temperature before dismantling the valve.

Never stick your fingers through the valve ports if the actuator is supplied with compressed air.

Never work on the valve or touch moving parts if the actuator is supplied with compressed air.

Never service the valve when it is hot.







Never cut the actuator open, due to spring under load danger - if marked with this warning

Do **NOT** attempt to disassemble or by other means open the actuator due to spring under load danger!

Never pressurize the valve/actuator when the valve is serviced **unless specifically prescribed.**

Storage



Alfa Laval recommend:

- Store the supplied Alfa Laval product as supplied in original packaging
- Port opening(s) should be protected against any ingress
- Store in a clean, dry place without direct sunlight or UV light
- Temperature range -5 °C to +40 °C (23 °F - 104 °F)
- Relative humidity less than 60%
- No exposure to corrosive substances (including contained air)

Noise



Under certain operating conditions, the supplied Alfa Laval product and/or the systems in which they are installed can produce high sound pressure levels. Appropriate noise protection measures should be taken when necessary and in accordance with local legislation.

Hazards



Burn Hazard

- Lubrication oil, machine parts and various machine surfaces can be hot and cause burns. Wear protective gloves



Corrosive Hazard

- Always handle cleaning liquids, lye and acid with great care and in accordance with separate instructions for those fluids
- When using chemical cleaning agents and lubricants, make sure you follow the general rules and suppliers recommendation regarding ventilation, personnel protection etc.



Cut Hazard

- Sharp edges, especially on threads, can cause cuts. Wear protective gloves

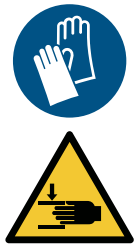

Crushing Hazard

- Avoid placing hands into valve orifice pinch points

2.3 Important Information

Actuators

If support air is utilised:

> **CAUTION** **Shock in the actuator must never occur.**
>
> To prevent shock in the actuator and to prevent exceeding 10 bar/145 PSI product pressure, Alfa Laval recommends **not** to exceed 3 bar/43.5 PSI support air on the spring side in all the Unique SSV actuators.

> **CAUTION** **Support air on high pressure actuator versions is not allowed.**
>
> If support air is connected always use the 3 bar/43.5 PSI air relief fittings = 9611995903/9611996094 (1/4" = 6.35 mm hose). Using the air relief fitting also extends the service life of the actuator piston O-ring.
>
> Obs. if using a 6 mm hose then use air relief fittings = 9611995903.

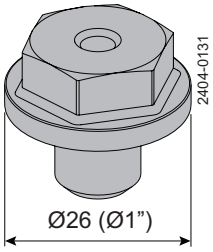

Pos. no. 5

For actuators, manufactured year 2005-2018, with serial number from 1000000 - 5999999 and from 20000000000 - 59999999999 always use steel adapter (pos 5) = 9614065301

Tighten torque = 30 Nm/23 lbf-ft

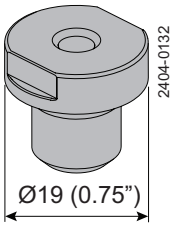

Pos. no. 5

For actuators, manufactured year 2019 --> with serial number from 6000000 to 7000000 and from 60000000000 to 70000000000 always use steel adapter (pos 5) = 9615374701

Tighten torque = 15 Nm/11 lbf-ft

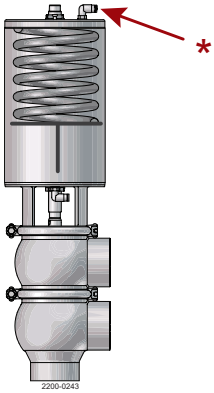

Alfa Laval recommends max. 3 bar support air.

Always use the "3 bar/43.5 PSI air relief fittings" on support air.

Alfa Laval article number = 9611995903/9611996094.

(1/4" = 6.35 mm hose).

2.4 Warning Signs in Text

Pay attention to the safety instructions in this Instruction Manual.

Below are definitions of the four grades of warning signs used in the text where there is a risk for injury to personnel or damage to the supplied Alfa Laval product.

DANGER

Indicates an imminently hazardous situation which, if not avoided, will result in death or serious injury.

WARNING

Indicates a potentially hazardous situation which, if not avoided, could result in death or serious injury.

CAUTION

Indicates a potentially hazardous situation which, if not avoided, may result in minor or moderate damage to the supplied Alfa Laval product.

NOTE

Indicates important information to simplify or clarify procedures.

2.5 Requirements of personnel

Operators

The operators shall read and understand this Instruction Manual.

Maintenance personnel

The maintenance personnel shall read and understand this Instruction Manual. The maintenance personnel or technicians shall be skilled within the field required to carry out the maintenance work safely.

Trainees

Trainees can perform tasks under the supervision of an experienced employee.

People in general

The public shall not have access to the supplied Alfa Laval product.

In some cases, specially skilled personnel may need to be hired (i.e. electricians, welders). In some cases the personnel has to be certified according to local regulations with experience of similar types of work.

2.6 Recycling information

WARNING

If the actuator is marked with one of the below warnings, do NOT attempt to disassemble it.

The spring inside is under load — any type of breakage of the actuator can lead to severe injury or even death!



Unpacking

Packing material may consist of wood, plastics, cardboard boxes and in some cases metal straps.

	• Wood and cardboard boxes can be reused, recycled or used for energy recovery • Plastics should be recycled or burnt at a licensed waste incineration plant • Metal straps should be sent for material recycling

Maintenance

During maintenance, oil (if used) and wear parts in the supplied Alfa Laval product should be replaced.

- Oil and all non-metal wear parts must be disposed of in accordance with local regulations
- Rubber and plastics should be burnt at a licensed waste incineration plant. If not available they should be disposed of in accordance with local regulations
- Bearings and other metal parts should be sent to a licensed handler for material recycling
- Seal rings and friction linings should be disposed of to a licensed land fill site. Check your local regulations
- All metal parts should be sent for material recycling
- Worn out or defected electronic parts should be sent to a licensed handler for material recycling

Scrapping

At end of use, the equipment must be recycled in accordance with the relevant local regulations. Besides the equipment itself, any hazardous residues from the process liquid must be considered and dealt with in a proper manner. When in doubt, or in the absence of local regulations, please contact your local Alfa Laval sales company.

How to contact Alfa Laval

Contact details for all countries are continually updated on our website.

Please visit *www.alfalaval.com* to access the information directly.

This page is intentionally left blank.

3 Introduction

The Alfa Laval Unique SSV ATEX Standard is a versatile, reliable pneumatic single seat valve with a single contact surface between the plug and the seat to minimize the risk of contamination. Its compact, modular and hygienic design meets the highest process demands in terms of hygiene and safety.

Built on the well-proven Unique SSV platform, it is ATEX-certified for use in environments with an explosive atmosphere. Few moving parts ensure high reliability and low maintenance costs. A wide range of optional features enables customization to specific process requirements.

3.1 ATEX Classification

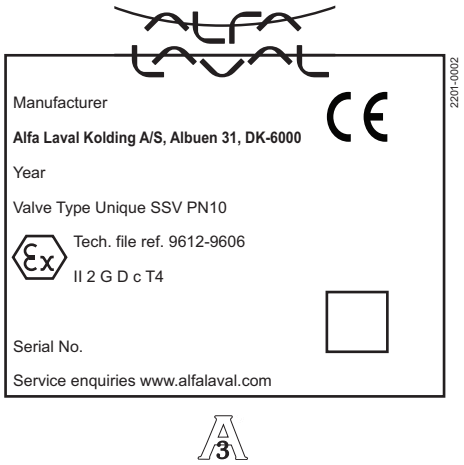

This page is intentionally left blank.

4 Installation

4.1 Unpacking/delivery

NOTE

The instruction manual is part of the delivery. Study the instructions thoroughly.

The items refer to *Parts lists and exploded views* on page 57.

The valve is supplied as separate parts as standard (for welding).

The valve is assembled before delivery, if it is supplied with fittings.

CAUTION

Alfa Laval cannot be held responsible for incorrect unpacking.

Check the delivery for:

1. Complete valve, shut-off valve (RA) or change-over valve (RA) (see the following information).
2. Delivery note.

Shut-off valve:

Complete actuator
19. Clamp
20. Bonnet
22. Valve body
23. Valve plug
64. Ground wire

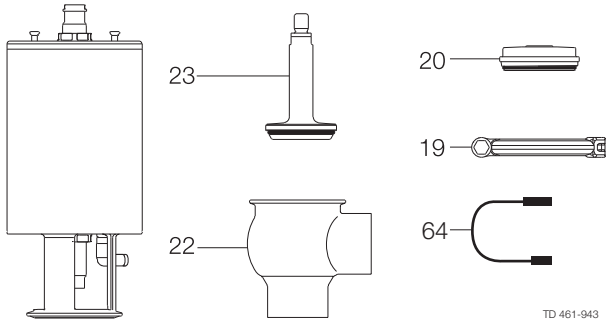

Change-over valve:

Complete actuator
19. 2 x clamps
20. Bonnet
22. Lower valve body
26. Upper valve body
27. Valve plug
28. Valve seat
64. Ground wire

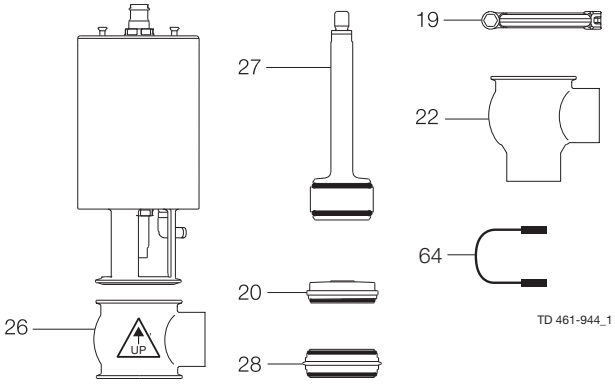

Shut-off valve - Reverse Acting:

Complete actuator.
19. 3 x clamps
20. Bonnet
23. Valve plug
26. 2 x upper valve bodies
28. Valve seat
33. Lower bonnet
64. Ground wire

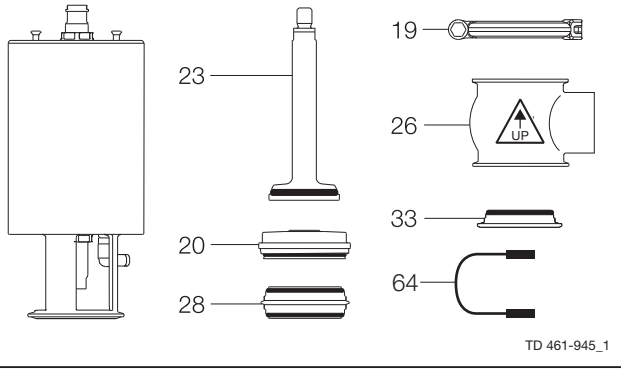

Change-over valve - Reverse Acting:

Complete actuator
19. 4 x clamps
20. Bonnet
26. 2 x upper valve bodies
28. 2 x Valve seat
33. Lower bonnet
34. Upper valve plug
35. Lower valve plug
64. Ground wire

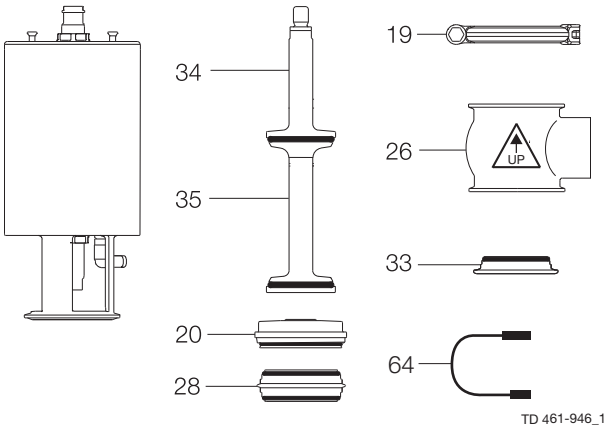

1. Remove possible packing materials from the valve/valve parts.

2. Inspect the valve/valve parts for visible transport damage.

   Avoid damaging the valve/valve parts.

4.2 General installation

NOTE

Study the instructions carefully and pay special attention to the warnings!

The valve has welding ends as standard but can also be supplied with fittings.

Always read the *Technical Data* on page 53 thoroughly.

NOTE

For EHEDG approved valves, use connection in compliance with the EHEDG position paper "Easy cleanable Pipe couplings and Process connections.

For EHEDG compliance during cleaning a minimum velocity of 1.5 m/s is required.

Ensure self-drainage E.g. by installing vertically or having the side port facing downwards.

CAUTION

Alfa Laval cannot be held responsible for incorrect installation.

Always release compressed air after use.

WARNING

If the actuator is marked with one of the below warnings, do NOT attempt to disassemble it.

The spring inside is under load - any type of breakage of the actuator can lead to severe injury or even death!



WARNING **Moving parts!**

Never touch the moving parts if the actuator is supplied with compressed air.

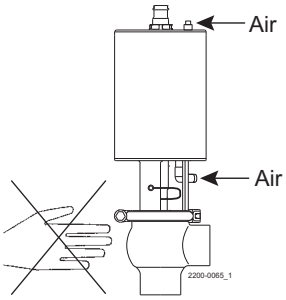

To avoid water hammering, it is recommended to install the valve so that the flow is against the spring closing direction.

Shock in the actuator must **never** occur.

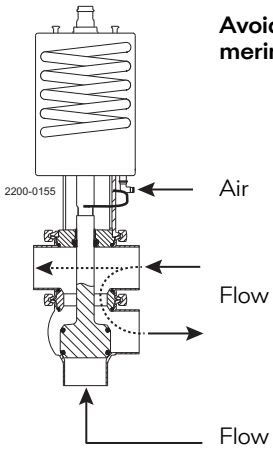

Avoid water hammering!

Pay special attention to shock in the actuator due to support air.

Shock in the actuator must **never** occur.

*) Careful if using support air on spring side and a high product pressure above the plug, as this can result in a high "hammer effect" which can damage the actuator.

Use Alfa Laval part no. 9611995903, which ensures max. 3 bar support air pressure.

Alternatively remove the product pressure while activating the plug.

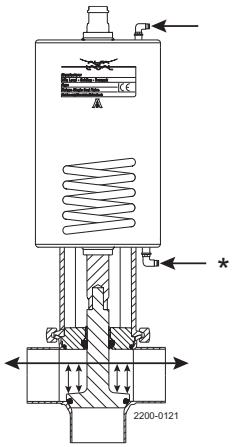

- Vibrations.
- Thermal expansion of the pipelines.
- Excessive welding.
- Overloading of the pipelines.

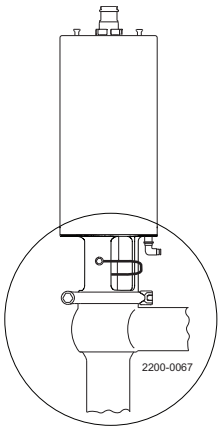

Risk of damage!

Make sure that the leak detection hole in the valve body:

1. is visible, when mounting the valve vertically
2. always is downwards due to self-draining, when the valve is mounted horizontally.

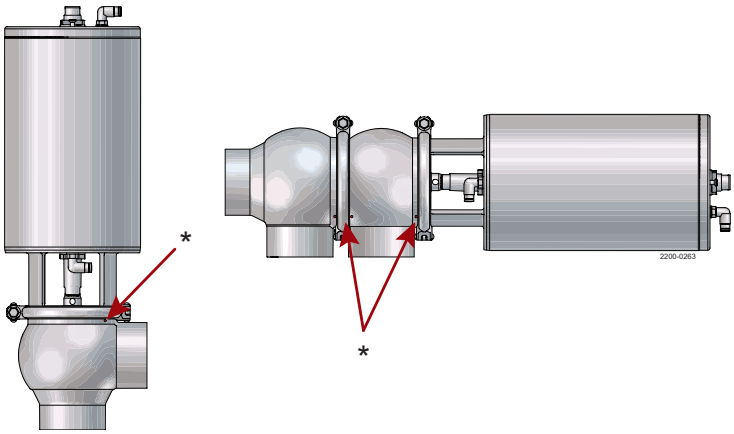

* = Leakage detection hole

4.3 Welding

NOTE

Study the instructions thoroughly.

The valve is supplied as separate parts to facilitate the welding.

The items refer to *Parts lists and exploded views* on page 57.

Check the valve for smooth operation after welding.

1

Always install valves with more than one valve body so that the seals between the valve bodies can be replaced. Do not weld more than one valve body into the system. It is recommended to fit sufficient clamps/unions to be able to disassemble the valve for servicing.

Valve size	A (mm)	B (mm)
DN25/25 mm	*	630
DN40/38 mm	*	700
DN50/51 mm	*	750
DN65/63.5 mm	*	740
DN80/76 mm	*	800
DN100/101.6 mm	*	790

* Depending on body combination and piping solution.

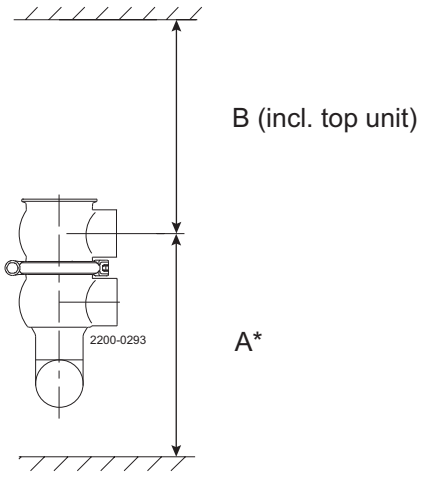

2

Assemble the valve in accordance with the steps in *Valve Assembly* on page 46.

Pay special attention to the warnings!

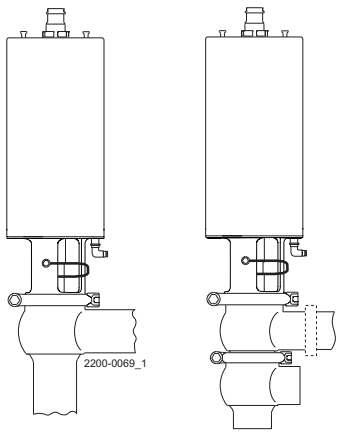

3

Pre-use check:

a) Supply compressed air to the actuator.

b) Open and close the valve several times to ensure that it operates smoothly.

Pay special attention to the warnings!

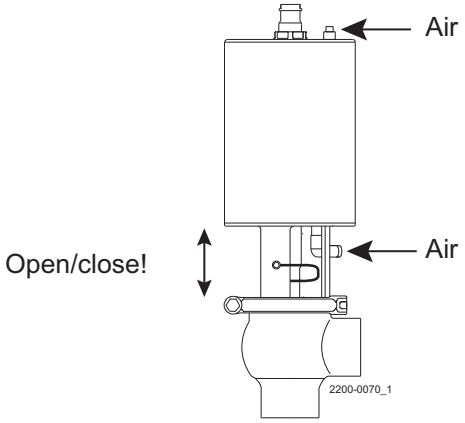

4

WARNING

Make sure the ground wire has electrical connection to plug and actuator.

All conducting parts or equipment must be arranged to avoid that a dangerous potential difference can exist between them. If there is a possibility of isolated metal parts becoming charged and acting as an ignition source, then earthing terminals must be provided.

This page is intentionally left blank.

5 Operation

5.1 Operation

NOTE

Study the instructions thoroughly and pay special attention to the warnings!

Always read *Technical Data* on page 53 thoroughly.

Ensure that the valve operates smoothly.

The items refer to *Parts lists and exploded views* on page 57.

CAUTION

Alfa Laval cannot be held responsible for incorrect installation.

Always release compressed air after use.

Always use Alfa Laval genuine spare parts. The warranty of Alfa Laval products is dependent on use of Alfa Laval genuine spare parts.

WARNING

If the actuator is marked with one of the below warnings, do NOT attempt to disassemble it.

The spring inside is under load - any type of breakage of the actuator can lead to severe injury or even death!



WARNING **Burn hazard!**

Never touch the valve or the pipelines when processing hot liquids or when sterilising.

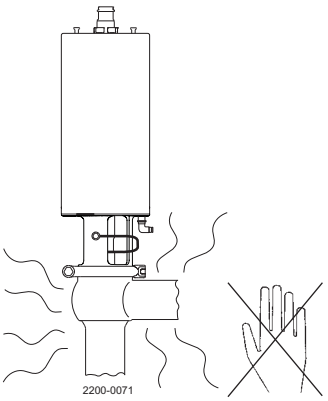

WARNING **Moving parts!**

Never touch moving parts if the actuator is supplied with compressed air.

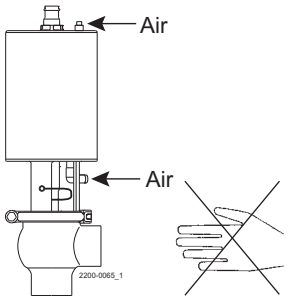

Lubrication of valves:

1. Ensure smooth movement between lip seal (25) and plug stem (23, 27).
2. Lubricate the lip seal with Klüber Paraliq GTE 703 if necessary (see *General maintenance* on page 37).

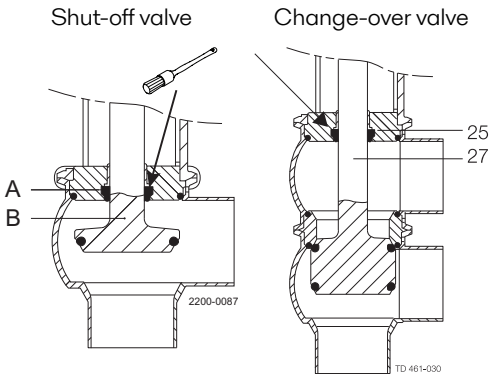

Lubrication of actuator

1. Ensure smooth movement of the actuator (the actuator is lubricated before delivery).
2. Lubricate all seals with Molykote Longterm 2 plus if necessary.

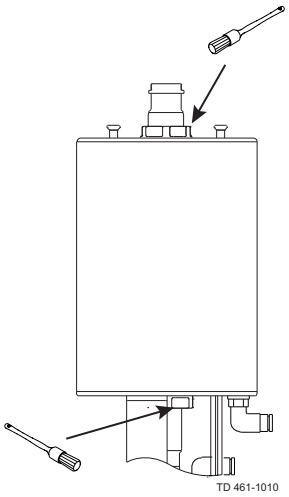

5.2 Troubleshooting

NOTE

Pay attention to possible faults.

Study the instructions thoroughly.

The items refer to *Parts lists and exploded views* on page 57.

WARNING

If the actuator is marked with one of the below warnings, do NOT attempt to disassemble it.

The spring inside is under load - any type of breakage of the actuator can lead to severe injury or even death!



NOTE

Study *General maintenance* on page 37 thoroughly before replacing worn parts.

Problem	Cause/result	Repair
External product leakage	Worn or damaged lip seal and/or O-ring	• Replace the seals • Replace with seals of a different rubber grade
Internal product leakage	• Worn or product affected plug seal	• Replace the seal • Replace with a seal of a different rubber grade
	• Product deposits on the seat and/or plug	• Frequent cleaning
	• Product pressure exceeds actuator specification	• Replace with a high pressure actuator • Use auxiliary air on the spring side (do not exceed 3 bar/43.5 psi). Alfa Laval article number = 9611995903. See *Safety Precautions* on page 12 and *General installation* on page 25 • Reduce product pressure
Water hammer	The flow direction is the same as the closing direction	• The flow direction should be against the closing direction. See section *General installation* on page 25 • Throttle air release of solenoid in top unit
The valve does not open/close	Product pressure exceeds actuator specification	• Replace with a high pressure actuator • Reduce product pressure • Use auxiliary air on the spring side. Always use the pressure relief fittings (3 bar/43.5 psi) on support side. Alfa Laval article number = 9611995903

5.3 Recommended Cleaning

NOTE

The supplied product is designed for cleaning in place (CIP).

NaOH = Caustic soda.

HNO_3 = Nitric acid.

The cleaning agents must be stored/disposed of in accordance with current regulations/directives.

CAUTION

Never touch the supplied product or the pipelines when sterilizing.

Always handle lye and acid with great care.



Examples of cleaning agents

Use clean water free from chlorides

Metric System

1. 1% by weight NaOH at 70°C

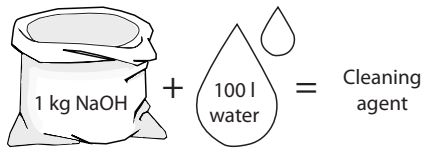

2. 0.5% by weight HNO_3 at 70°C

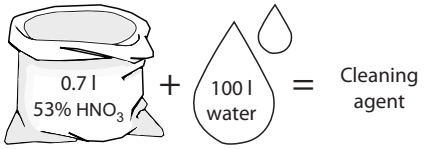

Imperial System

1. 1% by weight NaOH at 158°F

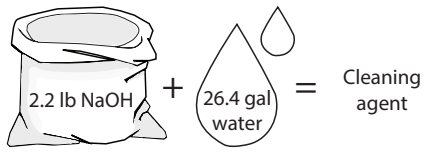

2. 0.5% by weight HNO_3 at 158°F

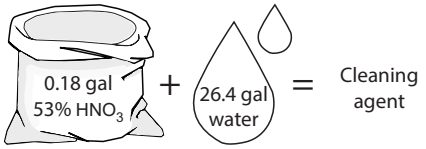

---

1. Avoid excessive concentration of the cleaning agent ⇒ **Dose gradually!**
2. Adjust the cleaning flow to the process
   Milk sterilization/viscous liquids ⇒ Increase the cleaning flow!

CAUTION

Always rinse well with clean water after the cleaning.

Always rinse!

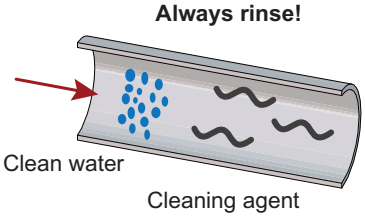

5.3.1 Cleaning

Clean the plug and the seats correctly.

Pay special attention to the warnings!

Lift and lower valve plug momentarily

Shut-off valve

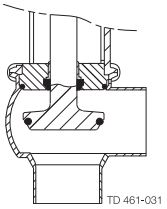

Change-over valve

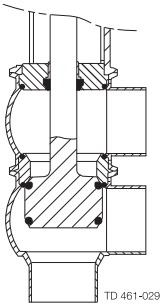

WARNING **Dust cleaning!**

Dust cleaning!

To avoid damage, all seal openings must be held free for dust. All surfaces must be cleaned for dust.

This page is intentionally left blank.

6 Maintenance

6.1 General maintenance

NOTE

Always read *Technical Data* on page 53 thoroughly.

Always use Alfa Laval genuine spare parts. The warranty of Alfa Laval products is dependent on use of Alfa Laval genuine spare parts.

Study the instructions thoroughly and pay special attention to the warnings!

Maintain the valve regularly.

Always keep spare rubber seals and lip seals in stock.

Check the valve for smooth operation after service.

Alfa Laval cannot be held responsible for incorrect installation.

CAUTION

Always release compressed air after use.

WARNING

If the actuator is marked with one of the below warnings, do NOT attempt to disassemble it.

The spring inside is under load - any type of breakage of the actuator can lead to severe injury or even death!



WARNING **Atmospheric pressure required!**

Never service the valve when it is hot.

Never service the valve with valve and pipelines under pressure.

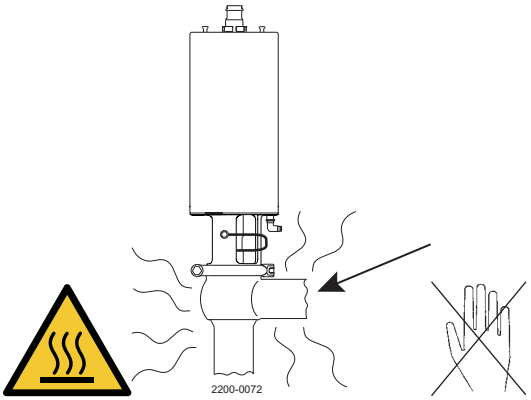

WARNING **Moving parts!**

Never stick your fingers through the valve ports if the actuator is supplied with compressed air.

Never touch the moving parts if the actuator is supplied with compressed air.

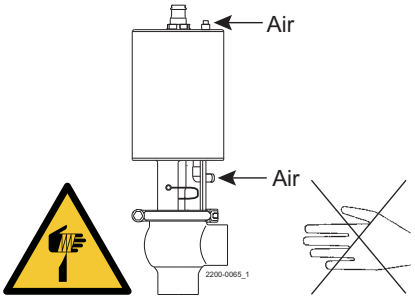

Below are some guidelines for maintenance and lubrication intervals. Please note that the guidelines are for normal working conditions in one shift.

	Product wetted seals	Actuator bushings complete
Preventive maintenance	**Replace after 12 months depending on working conditions**	**Replace with Service Kit or complete ATEX actuator after 5 years depending on working conditions**
Maintenance after leakage (leakage normally starts slowly)	**Replace at the end of the day**	**Replace when possible**
Planned maintenance	• Regular inspection for leakage and smooth operation • Keep a record of the valve • Use the statistics for inspection planning **Replace after leakage**	• Regular inspection for leakage and smooth operation • Keep a record of the actuator • Use the statistics for inspection planning **Replace after leakage**
Lubrication	**Before fitting** Klüber Paraliq GTE 703 or similar USDA H1 approved oil/grease	**Before fitting** Molykote Longterm 2 plus

Pre-use check:

1. Supply compressed air to the actuator.
2. Open and close the valve several times to ensure that it operates smoothly.
   Pay special attention to the warnings!

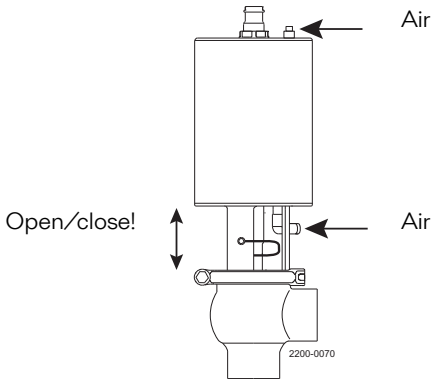

Recommended spare parts See *Parts lists and exploded views* on page 57

6.2 Dismantling the valve

NOTE

Study the instructions thoroughly.

The items refer to *Parts lists and exploded views* on page 57.

Handle scrap correctly.

NC = Normally closed.

NO = Normally open.

A/A = Air/air activated.

WARNING

If the actuator is marked with one of the below warnings, do NOT attempt to disassemble it.

The spring inside is under load - any type of breakage of the actuator can lead to severe injury or even death!



Shut-off valve:

NOTE

Be careful not to damage the bushing.

Pay special attention to the warnings!

For plug seal replacement please see *Plug Seal Replacement (Elastomer)* on page 42.

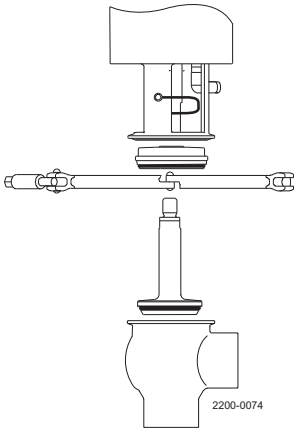

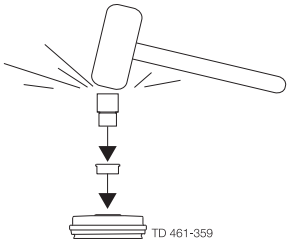

NOTE

Be careful not to damage the bushing.

1. Supply compressed air to the actuator (only NC)
2. Loosen and remove clamp
3. Release compressed air (only NC)
4. Lift away the actuator
5. Unscrew and remove valve plug
6. Remove ground wire terminal from valve plug
7. Remove O-ring, lip seal and bushing in bonnet. (Use bushing tool and rubber mallet)

Change-over valve:

> **NOTE**
>
> Be careful not to damage the bushing.
>
> **Pay special attention to the warnings!**
>
> For plug seal replacement please see *Plug Seal Replacement (Elastomer)* on page 42.

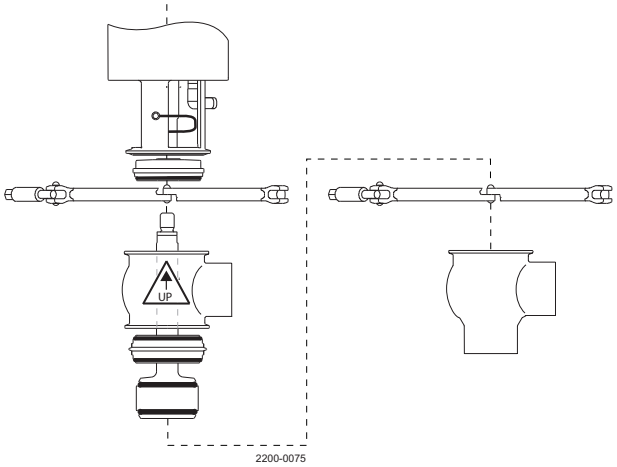

1. Supply compressed air to the actuator (only NC)
2. Loosen and remove lower clamp
3. Release compressed air (only NC)
4. Lift away the actuator and upper valve body
5. Supply compressed air to the actuator (only NO)
6. Unscrew and remove valve plug
7. Remove ground wire terminal from valve plug
8. Release compressed air (only NO)
9. Remove seat and O-rings
10. Loosen and remove upper clamp
11. Remove upper valve body
12. Remove O-ring, lip seal and bushing in bonnet (Use bushing tool and rubber mallet. See drawing under Shut-off valve)

Shut-off valve - Reverse Acting:

> **NOTE**
>
> Be careful not to damage the bushing.
>
> **Pay special attention to the warnings!**
>
> For plug seal replacement please see *Plug Seal Replacement (Elastomer)* on page 42.

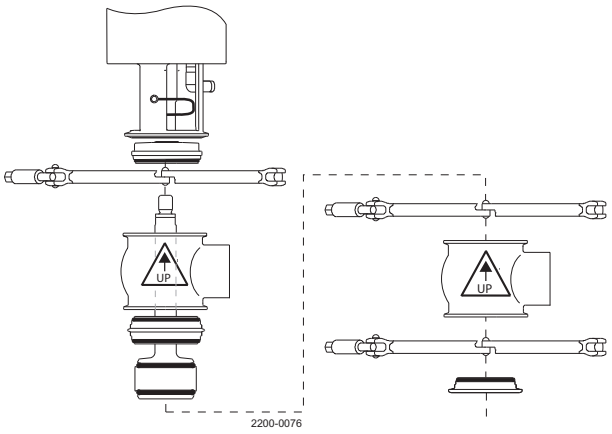

1. Loosen and remove lower clamp
2. Remove lower bonnet and O-ring from lower body
3. Loosen and remove middle clamp
4. Lift away the actuator and upper valve body
5. Supply compressed air to the actuator (only NC)
6. Unscrew and remove valve plug
7. Release compressed air (only NC)
8. Remove seat and O-rings
9. Loosen and remove upper clamp
10. Remove upper valve body
11. Remove O-ring, lip seal and bushing in bonnet (Use bushing tool and rubber mallet. See drawing under Shut-off valve)

Change-over valve - Reverse Acting:

> **NOTE**
>
> Be careful not to damage the bushing.
>
> **Pay special attention to the warnings!**
>
> For plug seal replacement please see *Plug Seal Replacement (Elastomer)* on page 42.

1. Loosen and remove lower clamp
2. Remove lower bonnet and O-ring
3. Loosen and remove clamp between lower and middle valve body
4. Lift away the actuator and upper + middle valve body
5. Supply compressed air to the actuator (only NC)
6. Unscrew and remove lower valve plug
7. Release compressed air (only NC)
8. Remove lower seat and O-rings
9. Supply compressed air to the actuator (only NO)
10. Loosen and remove clamp between middle and upper valve body
11. Remove middle valve body and upper seat with O-rings
12. Release compressed air (only NO)
13. Loosen and remove upper clamp
14. Remove upper valve body
15. Unscrew and remove upper valve plug
16. Remove O-ring, lip seal and bushing in bonnet
    (Use bushing tool and rubber mallet. See drawing under Shut-off valve)

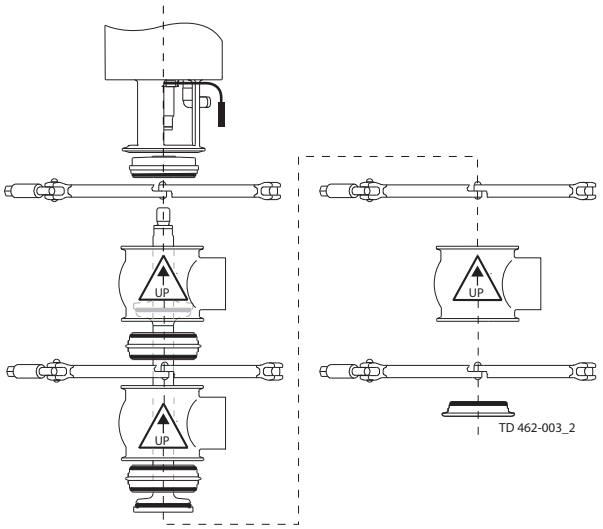

6.3 Plug Seal Replacement (Elastomer)

6.3.1 Removal of Plug Seal

Remove old seal ring using a knife, screwdriver or similar. Be careful not to damage the plug surface.

> **NOTE**
>
> Be careful not to scratch the plug surface.

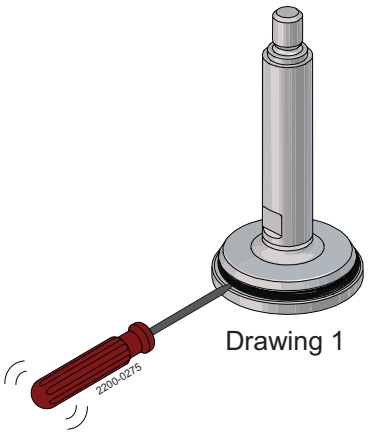

Drawing 1

6.3.2 Pre-mounting of plug seal

1. Lubricate the new plug seal with Alfa Laval Silicone based Food-grade Lubricant, which is included in the service kit.

   Only a small amount is needed.

2. Fit the plug seal onto the plug seal groove.

   > **NOTE**
   >
   > Be careful not to twist the plug seal.

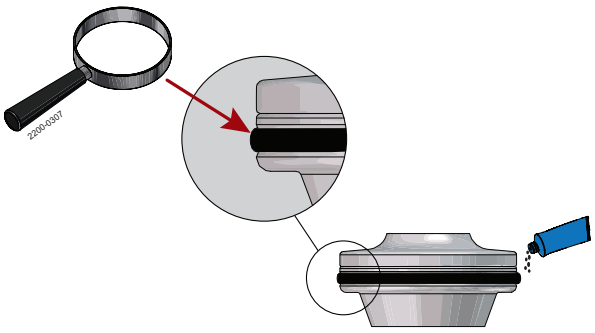

Drawing 2

3. The plug seal can now be mounted by hand or with the Alfa Laval plug tool.

6.3.3 Mounting plug seal by hand

1. Ensure full circumferential seating of the sealing by applying opposite pressure with your fingers. Eg. A - B and C - D.

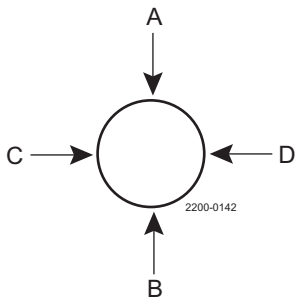

If a bulge is present, apply pressure on the plug seal and keep the pressure while rotating the plug 360°.

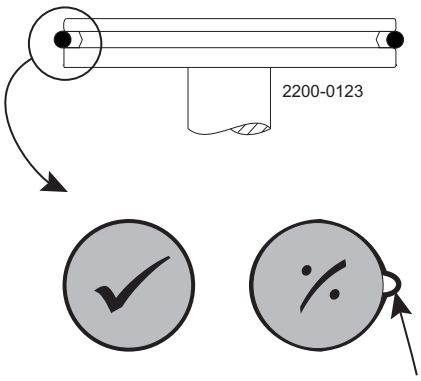

2. If necessary, trapped air behind the plug seal. can be relieved by use of a small flat-blade screwdriver.

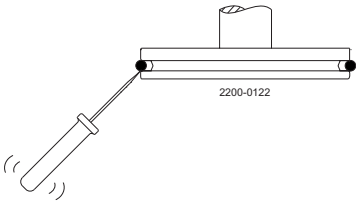

> **NOTE**
>
> Be careful not to scratch the surface of the plug and/or damage the seal.

6.3.4 Mounting plug seal with Alfa Laval plug seal tool

Mounting tool for elastomer plug seals	DN40 38 mm	DN50 - DN65 51 mm - 63.5 mm	DN80 - DN100 76.1 mm - 101.6 mm
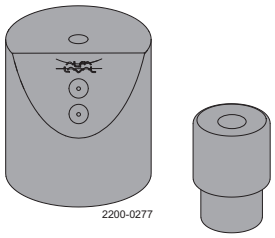	9613172901	9613172902	9613172903

A. Part A
B. Part B
C. Plugs
D. O-ring
E. Alfa Laval Silicone based Food-grade Lubricant from service kit
F. Flat-blade screwdriver (no sharp corner)
G. Exhaust holes for screwdriver
H. Ø20 hole for plug spindle

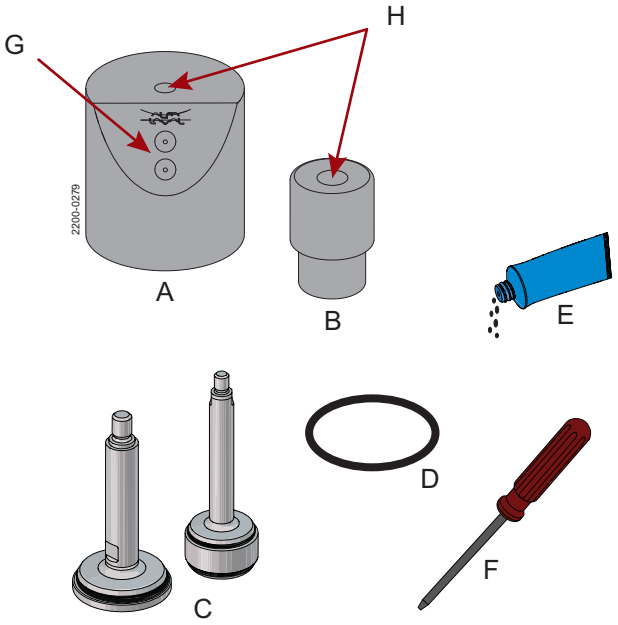

1 Assembly

For shut-off plug - See drawing 1.
For reverse acting plug - See drawing 2.
For change-over plug - See drawing 1 + 2.

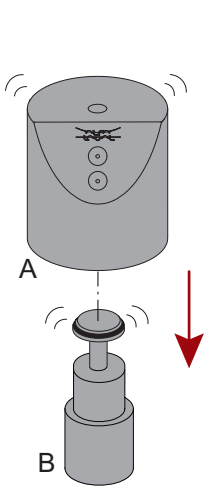

Drawing 1

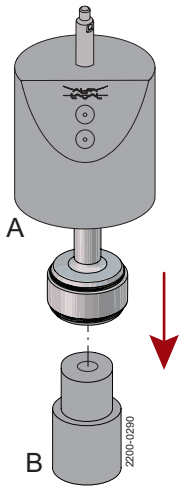

Drawing 2

2

a) Fit the plug according to plug type.

b) Apply force to push Part A and B together which will ensure full circumferential seating of the sealing.

c) To relieve trapped air behind the plug sealing, insert the flat-blade screwdriver through the applicable exhaust hole on part A and fit it between the plug sealing and plug.

With the flat-blade screwdriver fitted apply force again and a single "hiss" sound can be heard.

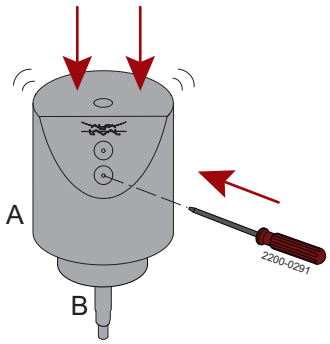

NOTE

Be careful not to scratch the surface of the plug and/or damage the seal.

6.4 Plug Seat Ring Replacement (TR2 and TR3)

> **NOTE**
>
> Use the mounting tool for TR2 and TR3- see spare part.

1. Place the plug element on a firm support.
2. Using a utility knife, partially and *CAREFULLY* cut through the upper ring portion of the TR2 plug avoiding contact with stainless steel stem.For TR3 use a finetoothed hacksaw.
3. Force apart both cut ends of the plug for removal from stem.
4. For TR2 and TR3 plugs are installed by applying uniform pressure on all sides. (Pressure can be applied by using the seat assembly tool).

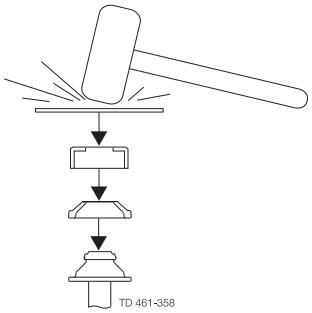

5. Using a piece of metal and a rubber mallet, place a precise tab to make the TR2 plug snap on to the stem.

   Reverse the tool and tab again to secure proper fit.
6. Examine seat assembly to be sure the TR2 and TR3 plug is properly mounted, holding the seat assembly in one hand - rotate the TR2 and TR3 plug. (For proper CIP cleaning the TR2 and TR3 plug should turn freely on the stem).

6.5 Valve Assembly

Reverse order of *Dismantling the valve* on page 39.

Lubricate O-ring (21) and lip seal (25) with Alfa Laval Lubricant.

Remember to tighten spindle and plug (use two 17 mm spanners).

- Change-over plug tighten torque = **30 Nm (22 lbf - ft)**
- Shut-off plug tighten torque = **20 Nm (15 lbf - ft)**

If there are vibrations in the pipeline, Alfa Laval recommends to use Loctite no. 243.

The clamps' thread must be lubricated before tightening - torque for the clamps is 10-12 Nm (8-9 lbf - ft).

6.6 Actuator

In June 2016 the below change was implemented and the "removable yoke with bolts" version is thereby phased out and replaced by the "yoke without bolts" version.

> **NOTE**
>
> It is important to check for warnings marked on the actuator when servicing an actuator - see below table.

	Non-maintainable actuator
Actuator type	Spring under load and **cannot** be opened 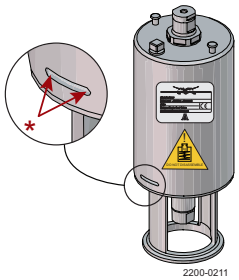 *) Lock wire opening is locked when warning is marked on actuator
Yoke type	Non-removable yoke
Service	Not possible to service internally (it is not possible to change piston O-rings)
Marked with warnings	Yes
Year of production	From 2006

6.7 Actuator Bushing Replacement (Non-maintainable Actuator)

WARNING

If the actuator is marked with one of the below warnings, do NOT attempt to disassemble it.

The spring inside is under load — any type of breakage of the actuator can lead to severe injury or even death!



Introduction

- The actuator service kit contains two bushings and four O-rings
- Mount the thick O-ring inside and the thin O-ring outside the bushing
- Lubricate the stem and O-rings with "Molykote Longterm 2 Plus" or an equivalent grease before sliding the new bushings onto the actuator stem



Introduction - Standard tubular box wrench

Use a 27 mm (11/16") tubular box wrench to unmount and/or mount the bushings.

This tool will allow the actuator stem to fit inside and will provide good access to the bushing placed in the actuator yoke end.

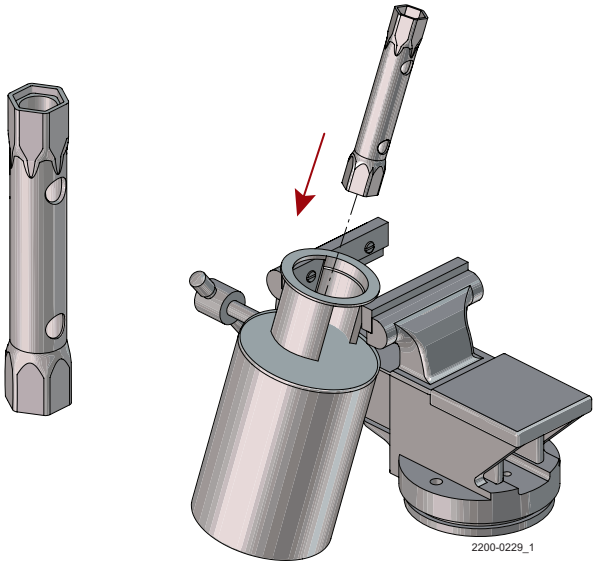

Introduction - Aligning spindle

The actuator spindle can in some cases be forced off centre by the internal spring, as shown.

In cases with misalignment of the actuator stem in relation to the bushing thread, as shown, the tubular box wrench together with a spindle for alignment is a great help and will ensure a reliable mounting of the bushing.

The aligning spindle can either be purchased from Alfa Laval (**9614198401**) which also include a 27 mm (1 1/16") tubular box wrench or it can be manufactured locally using below dimensions.

Dimension A is based on a tubular box wrench with a total length of 185 mm (7 1/4").

Dimensions
A = 280 mm (11")
B = 16 mm (0.63")
C = Rod Ø20 mm (0.79")
D = M12 x 1.5

Spindle forced off centre by spring inside actuator

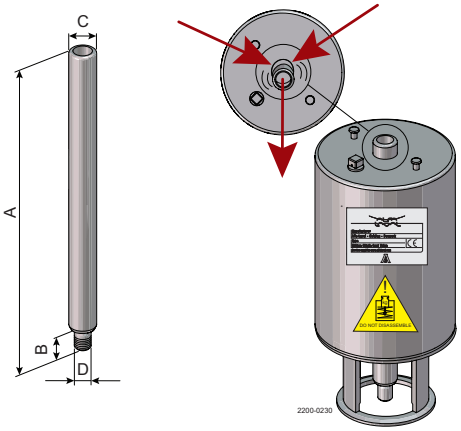

1. The actuator must be fixed in a vice, Alfa Laval recommend use of soft jaws.

   Be careful not to damage the yoke by over tightening and only fix carefully on the "yoke leg", as shown.

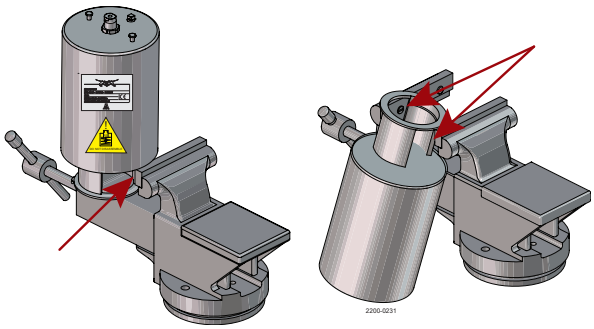

2. Remove the adaptor screw.

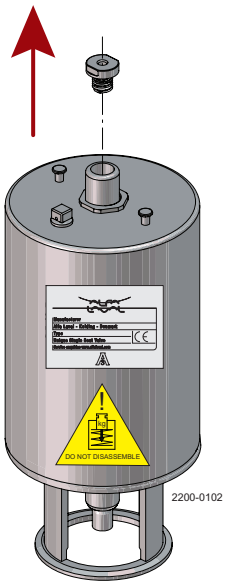

3 Slide the lubricated bushing onto the actuator stem.

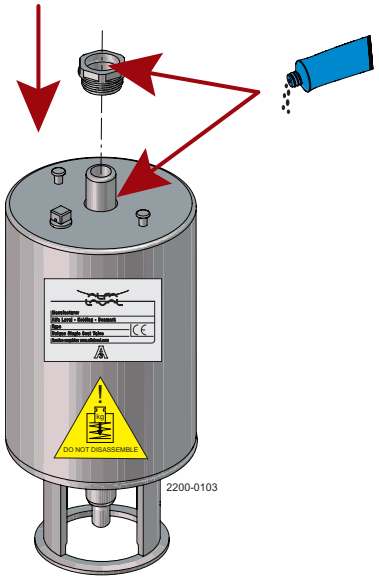

4 Fit the aligning spindle to the actuator stem and apply the tubular box wrench.

Aligning spindle

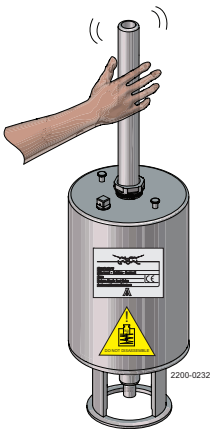

Tubular box wrench

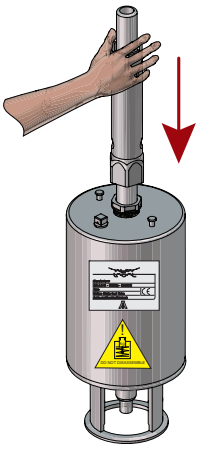

5 Now pull the aligning spindle to center the actuator stem in relation to the bushing thread. When centered, initiate fastening of the bushing. Ensure the thread catches evenly!

The bushing must only be tightened with a torque of 10 Nm (7 lb-ft) which is achievable by hand tightening only.

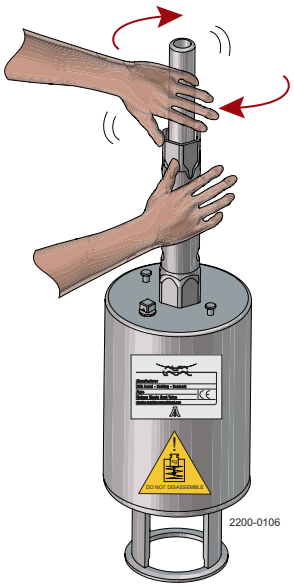

6 Mount adaptor screw.

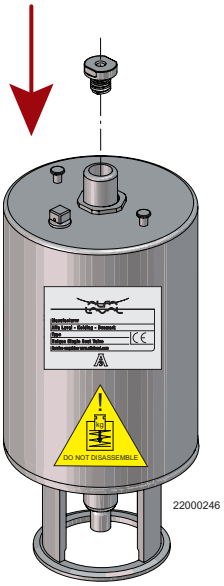

This page is intentionally left blank.

7 Technical Data

> **NOTE**
>
> Technical data must be observed during installation, operation and maintenance.
>
> All personnel should be informed about the technical data.

7.1 Technical Data

Temperature	
Temperature range:	-10 °C to +135 °C / +14 °F to +275 °F (EPDM)
Ambient temperature:	+10 °C to +40 °C / +50 °F to +104 °F

Pressure	
Max. product pressure:	1000 kPa / 10 bar / 145 psi
Min. product pressure:	Full vacuum (depending on product specifications)
Air pressure, actuator:	500-700 kPa / 5-7 bar / 72.5-101.5 psi

7.2 Physical Data

Materials - valve/actuator	
Product wetted steel parts:	1.4404 / AISI 316L
Other steel parts:	1.4301 / 304
Internal surface finish:	Bright (polished), Ra < 0.8 µm
Plug seal:	EPDM
Product wetted seals:	EPDM (standard)
Optional product wetted seals:	HNBR and FPM
Other seals:	NBR

Weight

kg (lb)

Nominal Size	**Inch tubes DN/OD**						**DIN tubes DN**					
	25 mm (1")	**38 mm (1½")**	**51 mm (2")**	**63.5 mm (2½")**	**76.1 mm (3")**	**101.6 mm (4")**	**DN25 (1")**	**DN40 (1½")**	**DN50 (2")**	**DN65 (2½")**	**DN80 (3")**	**DN100 (4")**
Shut-off valve	3.1 (6.8)	3.3 (7.3)	5.5 (12.1)	6.5 (14.3)	11.3 (24.9)	13.6 (30)	3.2 (7.1)	3.4 (7.5)	5.5 (12.1)	6.6 (14.6)	11.8 (26)	13.6 (30)
Change-over valve	3.9 (8.6)	4.2 (9.3)	7.1 (15.7)	8.5 (18.7)	14 (30.9)	18 (39.7)	4.1 (9)	4.5 (9.9)	7.2 (15.9)	8.8 (19.4)	14.9 (32.8)	17.9 (39.5)

This page is intentionally left blank.

8 Spare parts

For every delivered Alfa Laval Product, a spare part list is available.

This spare part list contains a range of the most common wear parts for the machinery. If any component not mentioned is required, please contact your local Alfa Laval representative for availability.

You can find our spare part catalogue at *https://hygienicfluidhandling-catalogue.alfalaval.com*.

Always use Alfa Laval genuine spare parts. The warranty of Alfa Laval products is dependent on use of Alfa Laval genuine spare parts.

8.1 Ordering spare parts

When ordering spare parts, please always state:

1. Serial number (if available)
2. Item number/spare part number (if available)
3. Capacity or other relevant identification

8.2 Alfa Laval service

Alfa Laval is represented in all larger countries of the world.

Do not hesitate to contact your local Alfa Laval representative, with any questions or requirement of spare parts for Alfa Laval equipment.

8.3 Warranty - Definition

WARNING

The rules of Intended use are absolute. Use of the supplied Alfa Laval product is allowed only when in compliance with the technical data supplied with the Intended use.

Differing utilisation, other than agreed with Alfa Laval Kolding A/S, exclude any liability and warranty.

No modification or alteration of the supplied Alfa Laval product is allowed, unless explicit permission is granted by Alfa Laval Kolding A/S.



Liability and warranty are excluded:

- If advice and instruction of operating instructions are ignored
- For incorrect operation or for insufficient maintenance of the supplied Alfa Laval product
- For any kind of change of function of the supplied Alfa Laval product without prior written agreement by Alfa Laval Kolding A/S
- If supplied Alfa Laval product is modified by non-authorised persons
- If using the supplied Alfa Laval product without attention of appropriate safety regulations, (see *Safety* on page 9)
- If protection equipment is not used and vessel process / ancillary equipment is not brought to a standstill
- If the supplied Alfa Laval product and ancillary parts are not properly maintained (to be executed in intervals and including fitting of prescribed replacement parts)

When exchanging parts, only original replacement parts, released from the manufacturer, must be used.

9 Parts lists and exploded views

9.1 Drawing — Unique Single Seat Valve — ATEX

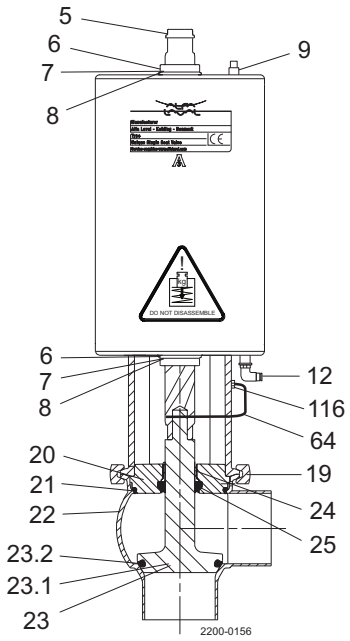

Shut-off valve

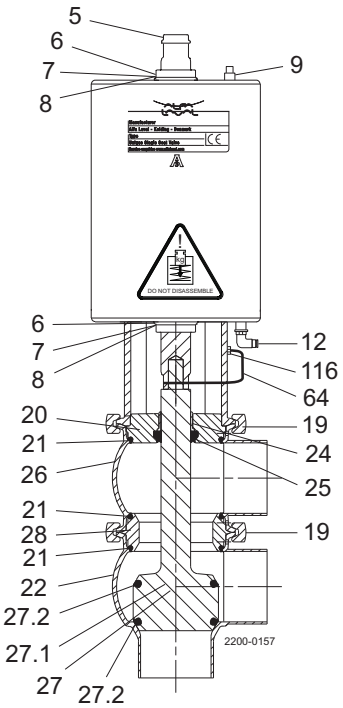

Change-over valve

9.2 Unique Single Seat Valve — ATEX — shut-off

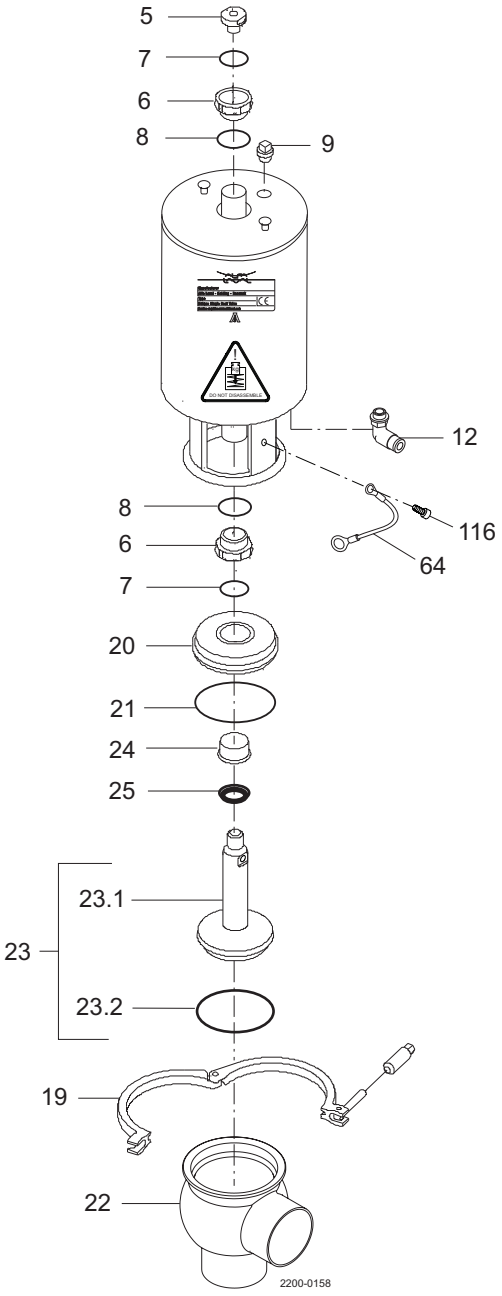

Pos.	Qty.	Denomination
5	1	Adapter
7	2	O-ring
8	2	O-ring
9	1	Plug
12	1	Air fitting
19	1	Clamp
20	1	Bonnet
21	1	O-ring

Pos.	Qty.	Denomination
22	1	Valve body
23	1	Plug, shut off
23.1	1	Plug, shut off
23.2	1	Plug seal
24	1	Bushing
25	1	Lip seal
64	1	Ground wire
116	1	Bolt

9.3 Unique Single Seat Valve — ATEX — change-over

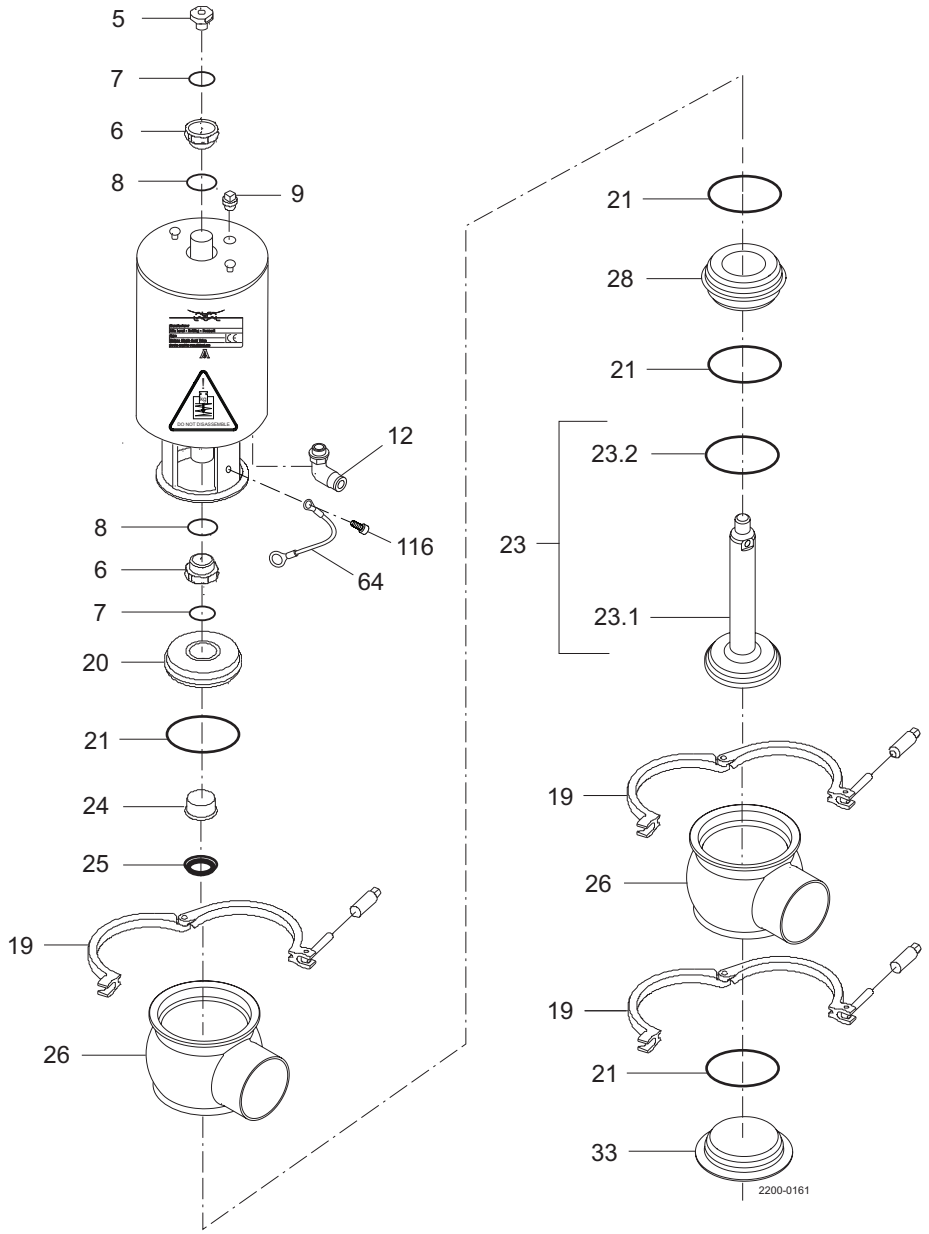

Pos.	Qty.	Denomination
5	1	Adapter
6	2	Bushing
7	2	O-ring
8	2	O-ring
9	1	Plug
12	1	Air fitting
19	1	Clamp
20	1	Bonnet
21	1	O-ring
22	1	Valve body

Pos.	Qty.	Denomination
24	1	Bushing
25	1	Lip seal
26	1	Valve body
27	1	Plug, change over
27.1	1	Plug, change over
27.2	2	Plug seal
28	1	Seat
64	1	Ground wire
116	1	Bolt

9.4 Drawing Unique Single Seat Valve — ATEX — Reverse Acting

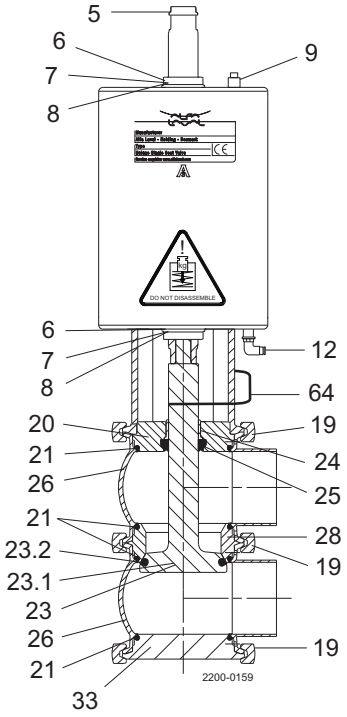

Shut-off valve — Reverse Acting

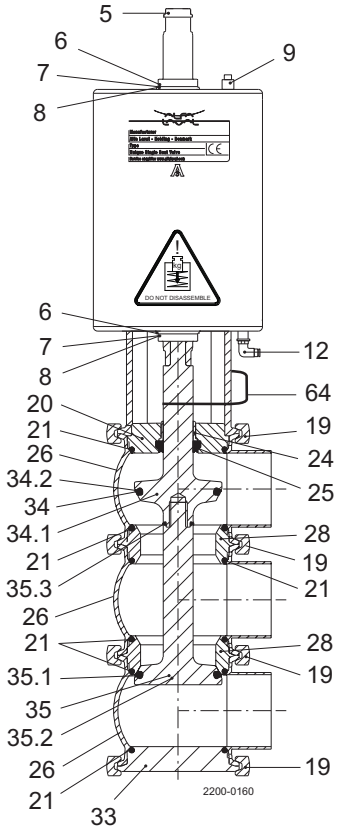

Change-over valve — Reverse Acting

9.5 Unique Single Seat Valve — ATEX — Reverse Acting — shut-off

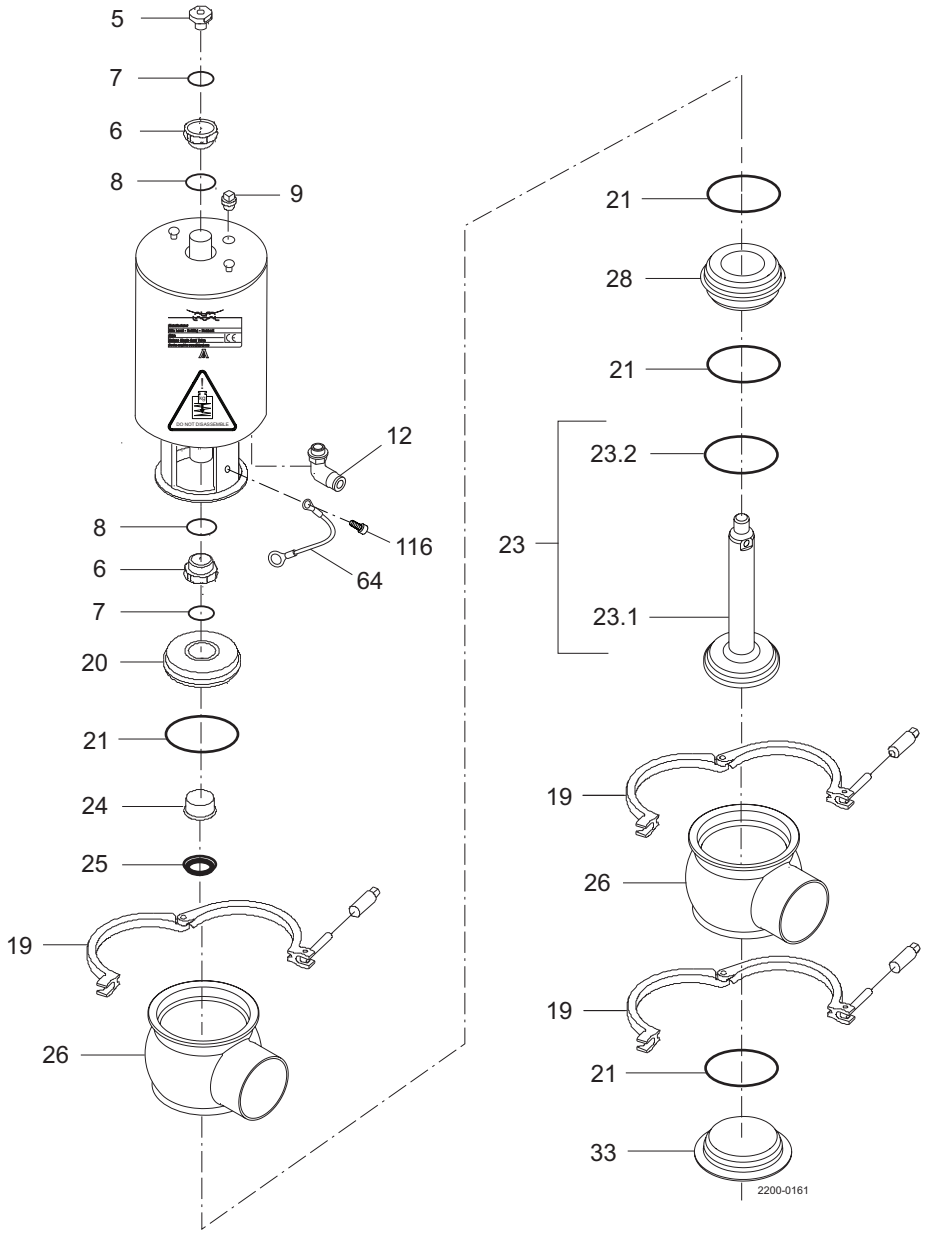

Pos.	Qty.	Denomination
		Actuator
5	1	Adapter
6	2	Bushing
7	2	O-ring
8	2	O-ring
9	1	Plug
12	1	Air fitting
19	3	Clamp
20	1	Sealing element
21	2	O-ring

Pos.	Qty.	Denomination
23	1	Plug, shut off RA
23.1	1	Plug, shut off RA
23.2	1	Plug, EPDM
24	1	Bearing
25	1	Lip seal
26	2	Valve body
28	1	Seat
33	1	Lower bonnet
64	1	Ground wire
116	1	Bolt

9.6 Unique Single Seat Valve — ATEX — Reverse Acting — change-over

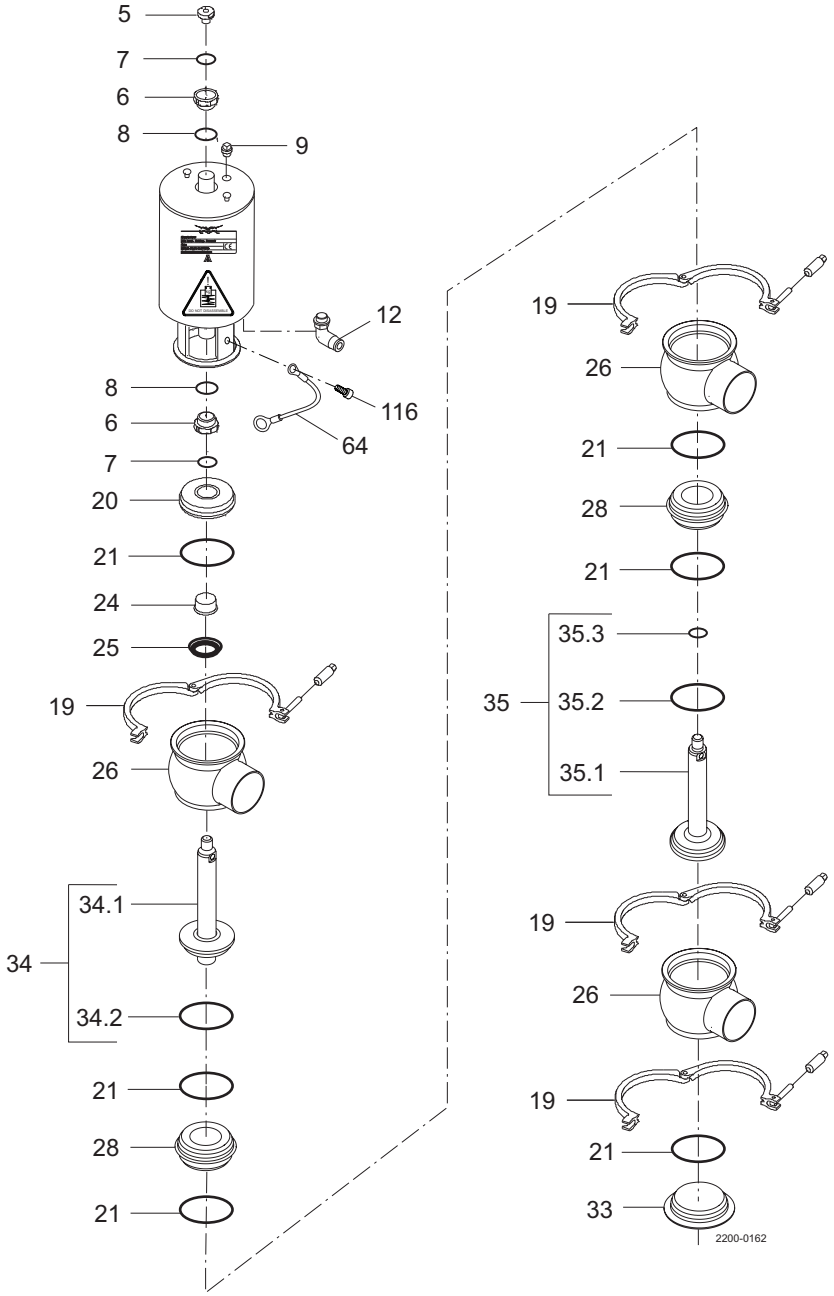

Pos.	Qty.	Denomination
		Actuator
5	1	Adapter
6	2	Bushing
7	2	O-ring
8	2	O-ring
9	1	Plug
12	1	Air fitting
19	4	Clamp
20	1	Sealing element
21	4	O-ring
24	1	Bearing
25	1	Lip seal

Pos.	Qty.	Denomination
26	3	Valve body
28	2	Seat
33	1	Lower bonnet
34	1	Plug, change over upper RA
34.1	1	Plug, change over upper RA
34.2	1	Plug seal
35	1	Plug, change over lower RA
35.1	1	Plug, change over lower RA
35.2	1	Plug seal
35.3	1	O-ring
64	1	Ground wire
116	1	Bolt