Unique SSV Y-body

Single seat valves



Lit. Code 200008031-2-EN-GB

Instruction Manual

British English

Published by
Alfa Laval Kolding A/S
Albuen 31
DK-6000 Kolding, Denmark
+45 79 32 22 00

The original instructions are in English

© Alfa Laval AB 2026-10

This document and its contents are subject to copyrights and other intellectual property rights owned by Alfa Laval AB (publ) or any of its affiliates (jointly "Alfa Laval"). No part of this document may be copied, re-produced or transmitted in any form or by any means, or for any purpose, without Alfa Laval's prior express written permission. Information and services provided in this document are made as a benefit and service to the user, and no representations or warranties are made about the accuracy or suitability of this information and these services for any purpose. All rights are reserved.

Contents

1 Declarations of Conformity 5

2 Safety 9

2.1 Safety Signs 10
2.2 Safety Precautions 12
2.3 Warning Signs in Text 16
2.4 Actuator types 17
2.5 Important Information 18
2.6 Requirements of personnel 19
2.7 Recycling information 20

3 Introduction 21

4 Installation 23

4.1 Unpacking/delivery 23
4.2 General installation 24
4.3 Welding 26

5 Operation 27

5.1 General operation 27
5.2 Troubleshooting 29
5.3 Recommended Cleaning 30
5.3.1 Cleaning 31

6 Maintenance 33

6.1 General maintenance 33
6.1.1 Maintenance product contact parts made of plastic 35
6.2 Dismantling the valve 36
6.3 TR2 seal ring replacement 37
6.4 Valve assembly 38
6.5 Actuator types 39
6.6 Actuator Bushing Replacement (Non-maintainable Actuator) 40

7 Technical Data 45

7.1 Technical data 45
7.2 Physical data 45

8 Spare parts 47

8.1 Ordering spare parts 47
8.2 Alfa Laval service 47
8.3 Warranty - Definition 48

9 Parts lists and exploded views..... 49
9.1 Unique SSV Y-body..... 49

1 Declarations of Conformity

EU Declaration of Conformity

The designated company

Alfa Laval Kolding A/S, Albuen 31, DK-6000 Kolding, Denmark, +45 79 32 22 00

Company name, address and phone number

Hereby declare that

Valve

Designation

Unique SSV LS PN10

Type

AAX000000001-AAX999999999, AAB000000001-AAB999999999, ABJ000000001-ABJ999999999, 1000000-70000000000

Serial number

is in conformity with the following directives with amendments:

- Machinery Directive 2006/42/EC
- Pressure Equipment Directive (PED) 2014/68/EU *category 1 and subjected to assessment procedure Module A*.

The person authorised to compile the technical file is the signer of this document.

Vice President Business Unit Hygienic Fluid Handling and Heat Transfer Technologies, Head of Product Management	Mikkel Nordkvist
Title	Name
Kolding, Denmark	2025-05-01
Place	Date (YYYY-MM-DD)



Signature

DoC Revison_ 01_052025 / This Declaration of Conformity replaces Declaration of Conformity dated 2022-10-01

EU Declaration of Conformity

The designated company

Alfa Laval Kolding A/S, Albuen 31, DK-6000 Kolding, Denmark, +45 79 32 22 00

Company name, address and phone number

Hereby declare that

Valve

Designation

Unique SSV LS PN10

Type

AAX000000001-AAX999999999, AAB000000001-AAB999999999, ABJ000000001-ABJ999999999, 1000000-70000000000

Serial number

is in conformity with the following directives with amendments:

- Regulation (EU) 2023/1230 on machinery
- Pressure Equipment Directive (PED) 2014/68/EU *category 1 and subjected to assessment procedure Module A.*

The person authorised to compile the technical file is the signer of this document.

Vice President Business Unit Hygienic Fluid Handling and Heat Transfer Technologies, Head of Product Management	Mikkel Nordkvist
Title	Name
Kolding, Denmark	2027-01-20
Place	Date (YYYY-MM-DD)



Signature

DoC Revison_02_012027

UK Declaration of Conformity

The designated company

Alfa Laval Kolding A/S, Albuen 31, DK-6000 Kolding, Denmark, +45 79 32 22 00

Company name, address and phone number

Hereby declare that

Valve

Designation

Unique SSV LS PN10

Type

AAX000000001-AAX999999999, AAB000000001-AAB999999999, ABJ000000001-ABJ999999999, 1000000-70000000000

Serial number

is in conformity with the following directives with amendments:

- The Supply of Machinery (Safety) Regulations 2008
- The Pressure Equipment (Safety) Regulations 2016 *category 1 and subjected to assessment procedure Module A*.

Signed on behalf of: Alfa Laval Kolding A/S.

Vice President Business Unit Hygienic Fluid Handling and Heat Transfer Technologies, Head of Product Management	Mikkel Nordkvist
Title	Name

Kolding, Denmark	2025-05-01	
Place	Date (YYYY-MM-DD)	Signature

DoC Revison_02_052025

This page is intentionally left blank.

2 Safety

Read this first





This Instruction Manual is designed for operators and service engineers working with the supplied Alfa Laval product.

Operators must read and understand the ***Safety, Installation and Operating*** instructions of the supplied Alfa Laval product before carrying out any work or before you put the supplied Alfa Laval product into service!

Not following the instructions can result in serious accidents.

This documentation describes the authorized way to use the supplied Alfa Laval product. Alfa Laval will take no responsibility for injury or damage if the equipment is used in any other way.

This Instruction Manual is designed to provide the user with the information to perform tasks safely for all phases in the lifetime of the supplied Alfa Laval product.

The operator shall always read the chapter ***Safety*** first. Hereafter the operator can skip to the relevant section for the task to be carried out or for the information needed.

Always read the chapter ***Technical Data*** thoroughly.

This is the complete Instruction Manual for the supplied Alfa Laval product.

NOTE

The illustrations and specifications in this Instruction Manual were effective at the date of printing. However, as continuous improvements are our policy, we reserve the right to alter or modify the Instruction Manual without prior notice or any obligation.

The English version of the Instruction Manual is the original manual. Alfa Laval cannot be held responsible for incorrect translations. In case of doubt, the English version applies.

2.1 Safety Signs

Mandatory Action Signs

	General mandatory action sign.
	Refer to instruction manual.
	Use eye protection - safety glasses.
	Use protective hand wear - safety gloves.
	Wear protective equipment - safety helmet.
	Use ear protection in noisy environments - noise protector.
	Wear protective equipment - safety shoes.

Warning Signs

	General warning.
	Transportation with forklift truck or other industrial vehicles if heavy.
	Hot surface and Burn Hazard.
	Cutting danger.
	Corrosive substance.
	Crushing of hands.
	Danger of injury (lasermarked on the actuator). Do **not** attempt to disassemble the actuator due to spring under load danger! (The lock wire opening is blocked).
	Danger of injury (lasermarked on the actuator). Do **not** attempt to cut open actuator due to spring under load danger! (The lock wire opening is blocked).
	Danger of injury (label marked on actuator). Do **not** attempt to cut the actuator open due to spring under load (the lock wire opening is locked).

2.2 Safety Precautions

All warnings in the Instruction Manual are summarised on these pages. Pay special attention to the instructions below so that severe personal injury and/or damage to the supplied Alfa Laval product is avoided.

General

	To prevent unexpected start and contact with electrical live and moving parts. **Always** disconnect the power supply and air supply safely: • The power supply disconnecting device and air supply must be disconnected (in off position) and locked.

Transportation and Lifting

	**Never** lift or elevate in any way other than described in this manual. **Always** use the original packaging or similar during transportation. **Always** ensure that personnel must have experience with lifting operations. **Always** ensure that all connections are disconnected before attempting to remove the valve from the installation. **Always** ensure that no leakage of lubricants can occur. **Always** drain liquid out of the valves before transportation. **Always** ensure sufficient fixing of the valve during transportation - if specially designed packaging material is available, it must be used. **Always** ensure that compressed air is released.
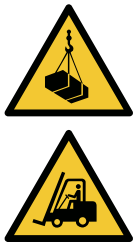	**Always** use designated lifting points if defined. Ensure that the lifting equipment is suitable for the supplied Alfa Laval product. **Always** ensure that the unit is securely fixed during transportation. **Always** ensure the lifting point to be in line with center of gravity. Adjust lifting point if necessary. **Always** use suitable transport device ie. forklift or pallet lifter. **Always** use appropriate lifting equipment for heavy parts when relevant. Use lifting logs when available. **Always** keep an eye on the load and stay clear during the lifting operation.

Installation

	If the local safety regulations prescribe that the installation has to be inspected and approved by responsible authorities before the valve is put into service, consult with such authorities before installing the equipment and have the projected installation approved by them. **Always** release compressed air after use. **Always** assemble the valve completely before startup and make sure everything is in place and correctly tightened.
  	**Never** work on the valve or touch moving parts if the actuator is supplied with compressed air. **Always** ensure that the valve and pipelines are depressurized, emptied, and cooled down to ambient temperature before installation, inspection, assembly, or dismantling of the valve. **Never** touch the valve or the pipelines when processing hot liquids or when sterilising.
  	Do **NOT** attempt to disassemble or by other means open the actuator due to spring under load danger!

Operation

	Always read ***Technical Data*** thoroughly. **Never** operate the valve unless a correct installation has been verified. **Never** dismantle the valve during operation or when pressurized.
	**Never** touch the valve or pipelines when hot. **Never** touch the valve or the pipelines when processing hot liquids or when sterilising.
	**Always** rinse well with clean water after cleaning. **Always** handle lye and acid with great care. **Always** follow the instructions in the safety data sheets from the suppliers of cleaning agents, detergents, oils etc.
	**Never** touch moving parts of the valve during operation. **Always** release compressed air after use.

Maintenance



In order to optimise the operation of the supplied Alfa Laval product and to minimize the down time due repair activities, the maintenance includes:

- Inspection and maintenance of the supplied Alfa Laval product: strictly follow the technical documentation
- **Preventive maintenance:** visual inspection of the supplied Alfa Laval product followed by necessary adjustments and planned periodic replacement of wear and tear parts
- **Repairs:** unscheduled break down of a component, often causing the system to stop. Damaged components must be replaced
- **Stock of Alfa Laval genuine spare parts:** Alfa Laval recommend keeping a stock of genuine spare parts facilitating preventive maintenance and reducing downtime in case of unplanned break downs

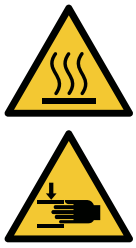

Always release compressed air after use.

Always ensure that the valve and pipelines are depressurized, emptied, and cooled down to ambient temperature before dismantling the valve.

Never stick your fingers through the valve ports if the actuator is supplied with compressed air.

Never work on the valve or touch moving parts if the actuator is supplied with compressed air.

Never service the valve when it is hot.

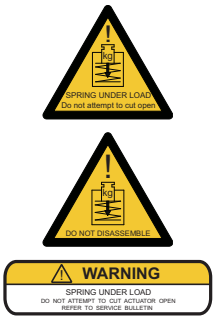

Do **NOT** attempt to disassemble or by other means open the actuator due to spring under load danger!

Never pressurize the valve/actuator when the valve is serviced **unless specifically prescribed.**

Storage



Alfa Laval recommend:

- Store the supplied Alfa Laval product as supplied in original packaging
- Port opening(s) should be protected against any ingress
- Store in a clean, dry place without direct sunlight or UV light
- Temperature range -5 °C to +40 °C (23 °F - 104 °F)
- Relative humidity less than 60%
- No exposure to corrosive substances (including contained air)

Noise



Under certain operating conditions, the supplied Alfa Laval product and/or the systems in which they are installed can produce high sound pressure levels. Appropriate noise protection measures should be taken when necessary and in accordance with local legislation.

Hazards



Burn Hazard

- Lubrication oil, machine parts and various machine surfaces can be hot and cause burns. Wear protective gloves



Corrosive Hazard

- Always handle cleaning liquids, lye and acid with great care and in accordance with separate instructions for those fluids
- When using chemical cleaning agents and lubricants, make sure you follow the general rules and suppliers recommendation regarding ventilation, personnel protection etc.



Cut Hazard

- Sharp edges, especially on bowl discs and threads, can cause cuts. Wear protective gloves



Crushing Hazard

- Avoid placing hands into valve orifice pinch points

Safety check



A visual inspection of any protective device (shield, guard, cover or other) on the supplied Alfa Laval product shall be carried out at least every 12 months. If the protective device is lost or damaged, especially when this leads to deterioration of safety performance, it shall be replaced. The fixing of the protective device should only be replaced with fixings of the same or an equivalent type.

Inspection acceptance criteria:

- It should not be possible to reach moving parts originally protected by a protective device
- The protective device must be securely mounted
- Ensure that screws for the protective device are securely tightened

Procedure in case of non-acceptance:

- Fix and/or replace the protective device

2.3 Warning Signs in Text

Pay attention to the safety instructions in this Instruction Manual.

Below are definitions of the four grades of warning signs used in the text where there is a risk for injury to personnel or damage to the supplied Alfa Laval product.

DANGER

Indicates an imminently hazardous situation which, if not avoided, will result in death or serious injury.

WARNING

Indicates a potentially hazardous situation which, if not avoided, could result in death or serious injury.

CAUTION

Indicates a potentially hazardous situation which, if not avoided, may result in minor or moderate damage to the supplied Alfa Laval product.

NOTE

Indicates important information to simplify or clarify procedures.

2.4 Actuator types

Different actuator types for the SSV valve

In June 2016 the below change was implemented and the "removable yoke with bolts" version is thereby phased out and replaced by the "yoke without bolts" version.

> **NOTE**
>
> It is important to check for warnings marked on the actuator when servicing an actuator - see below table.

	Non-maintainable actuator	Fully maintainable actuator	Fully maintainable actuator
Actuator type	Spring under load and **cannot** be opened 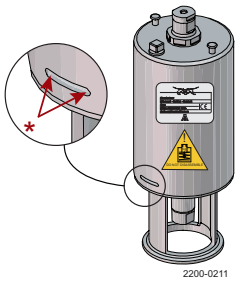 2200-0211 *) Lock wire opening is locked when warning is marked on actuator	Spring cage and can be opened 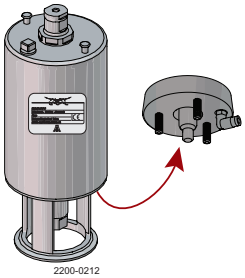 2200-0212	Spring cage and can be opened  2200-0213
Yoke type	Non-removable yoke	"Removable yoke with bolts". If the yoke with bolts is damaged it has to be replaced by the "yoke without bolts".	"Yoke without bolts"
Service	Not possible to service internally (it is not possible to change piston O-rings)	Yes	Yes
Marked with warnings	Yes	No	No
Year of production	From 2006	From 2006 to June 2016	From June 2016

2.5 Important Information

Actuators

If support air is utilised:

> **CAUTION** **Shock in the actuator must never occur.**
>
> To prevent shock in the actuator and to prevent exceeding 10 bar/145 PSI product pressure, Alfa Laval recommends **not** to exceed 3 bar/43.5 PSI support air on the spring side in all the Unique SSV actuators.

> **CAUTION** **Support air on high pressure actuator versions is not allowed.**
>
> If support air is connected always use the 3 bar/43.5 PSI air relief fittings = 9611995903/9611996094 (1/4" = 6.35 mm hose). Using the air relief fitting also extends the service life of the actuator piston O-ring.
>
> Obs. if using a 6 mm hose then use air relief fittings = 9611995903.

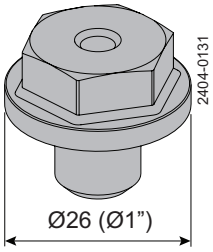

Pos. no. 5

For actuators, manufactured year 2005-2018, with serial number from 1000000 - 5999999 and from 20000000000 - 59999999999 always use steel adapter (pos 5) = 9614065301

Tighten torque = 30 Nm/23 lbf-ft

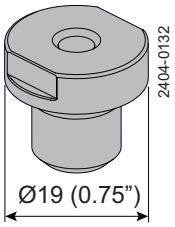

Pos. no. 5

For actuators, manufactured year 2019 --> with serial number from 6000000 to 7000000 and from 60000000000 to 70000000000 always use steel adapter (pos 5) = 9615374701

Tighten torque = 15 Nm/11 lbf-ft

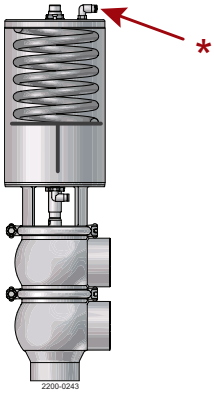

Alfa Laval recommends max. 3 bar support air.

Always use the "3 bar/43.5 PSI air relief fittings" on support air.

Alfa Laval article number = 9611995903/9611996094.

(1/4" = 6.35 mm hose).

2.6 Requirements of personnel

Operators

The operators shall read and understand this Instruction Manual.

Maintenance personnel

The maintenance personnel shall read and understand this Instruction Manual. The maintenance personnel or technicians shall be skilled within the field required to carry out the maintenance work safely.

Trainees

Trainees can perform tasks under the supervision of an experienced employee.

People in general

The public shall not have access to the supplied Alfa Laval product.

In some cases, specially skilled personnel may need to be hired (i.e. electricians, welders). In some cases the personnel has to be certified according to local regulations with experience of similar types of work.

2.7 Recycling information

WARNING

If the actuator is marked with one of the below warnings, do NOT attempt to disassemble it.

The spring inside is under load — any type of breakage of the actuator can lead to severe injury or even death!



Unpacking

Packing material may consist of wood, plastics, cardboard boxes and in some cases metal straps.

	• Wood and cardboard boxes can be reused, recycled or used for energy recovery • Plastics should be recycled or burnt at a licensed waste incineration plant • Metal straps should be sent for material recycling

Maintenance

During maintenance, oil (if used) and wear parts in the supplied Alfa Laval product should be replaced.

- Oil and all non-metal wear parts must be disposed of in accordance with local regulations
- Rubber and plastics should be burnt at a licensed waste incineration plant. If not available they should be disposed of in accordance with local regulations
- Bearings and other metal parts should be sent to a licensed handler for material recycling
- Seal rings and friction linings should be disposed of to a licensed land fill site. Check your local regulations
- All metal parts should be sent for material recycling
- Worn out or defected electronic parts should be sent to a licensed handler for material recycling

Scrapping

At end of use, the equipment must be recycled in accordance with the relevant local regulations. Besides the equipment itself, any hazardous residues from the process liquid must be considered and dealt with in a proper manner. When in doubt, or in the absence of local regulations, please contact your local Alfa Laval sales company.

How to contact Alfa Laval

Contact details for all countries are continually updated on our website.

Please visit *www.alfalaval.com* to access the information directly.

3 Introduction

The Alfa Laval Unique SSV Y-body is a versatile, reliable pneumatic single seat valve with a single contact surface between the plug and the seat to minimize the risk of contamination. Its compact, modular and hygienic design meets the highest process demands in terms of hygiene and safety.

Built on the well-proven Alfa Laval Unique SSV platform, the Unique SSV Y-body provides uninterrupted flow and gentle handling of products that are highly viscous or contain large particles and require gentle product treatment.

Few moving parts ensure easy dismantling, high reliability and low maintenance costs. A wide range of optional features enables customization to specific process requirements.

This page is intentionally left blank.

4 Installation

4.1 Unpacking/delivery

NOTE

The Instruction Manual is part of the delivery. Study the instructions thoroughly.

The items refer to *Parts lists and exploded views* on page 49.

The valve is assembled before delivery, if it is supplied with fittings.

CAUTION

Alfa Laval cannot be held responsible for incorrect unpacking.

Check the delivery for:

1. Complete valve
2. Delivery note
3. Instruction Manual

Complete actuator:

1. Bonnet (20).
2. Upper clamp (19).
3. Valve plug (36).
4. Valve body (22).
5. Lower clamp (61)

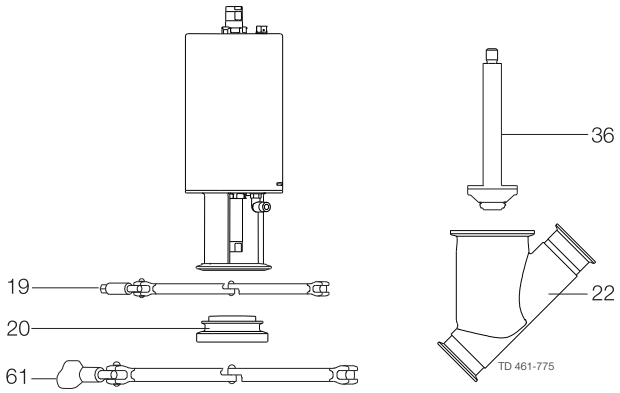

1. Remove possible packing materials from the valve/valve parts.

2. Inspect the valve/valve parts for visible transport damage.

   Avoid damaging the valve/valve parts.

4.2 General installation

NOTE

Study the instructions thoroughly and pay special attention to the warnings!

Always read *Technical Data* on page 45 thoroughly.

CAUTION

Alfa Laval cannot be held responsible for incorrect installation.

WARNING

Always release compressed air after use.

WARNING **Moving parts!**

Never touch moving parts if the actuator is supplied with compressed air.

Moving parts!

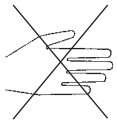

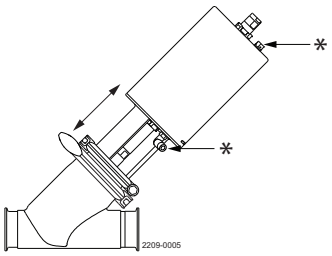

* = Air

To avoid water hammering, it is recommended to install the valve so that the flow is against the closing direction.

Avoid water hammering

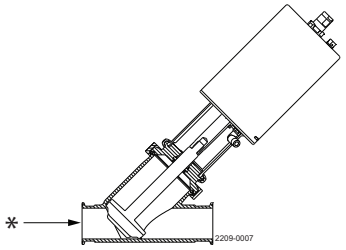

* = Inlet

Avoid stressing the valve.

Pay special attention to:

- Vibrations
- Thermal expansion of the pipelines
- Overloading of the pipelines

Risk of damage!

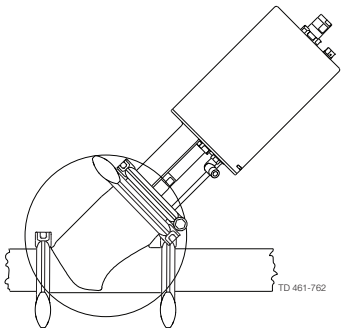

Make sure that the leak detection hole in the valve body:

1. is visible, when mounting the valve vertically
2. is always downwards due to self-draining, when the valve is mounted horizontally

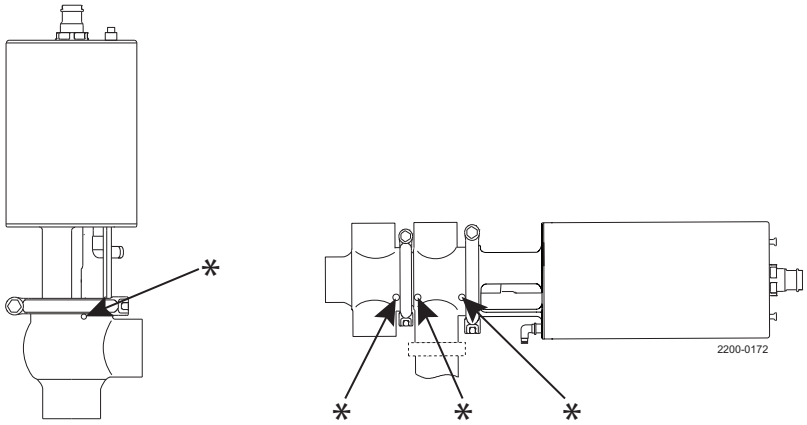

* = Leakage detection hole

4.3 Welding

NOTE

Study the instructions thoroughly.

The items refer to *Parts lists and exploded views* on page 49.

Valve size	A (mm/inch)
DN50/51 mm (2 inch)	478/18.8
DN65/63.5 mm (2.5 inch)	490/19.3
DN80/76.1 mm (3 inch)	564/22.2
DN100/101.6 mm (4 inch)	605/23.8

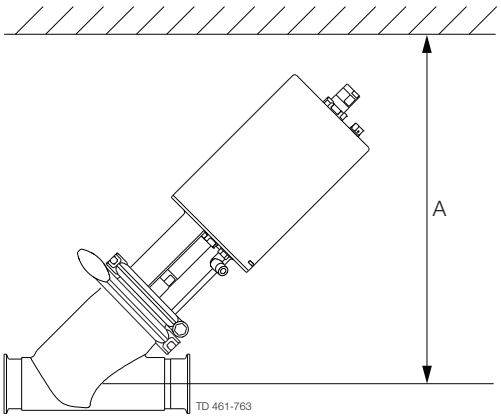

A = Incl. top unit

Assemble the valve in accordance with the steps in *Valve assembly* on page 38.

Pay special attention to the warnings!

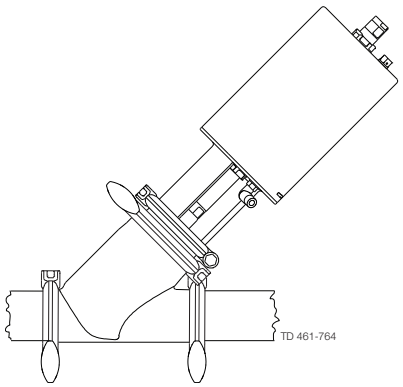

Pre-use check

1. Supply compressed air to the actuator.
2. Open and close the valve several times to ensure that it operates smoothly.

Pay special attention to the warnings!

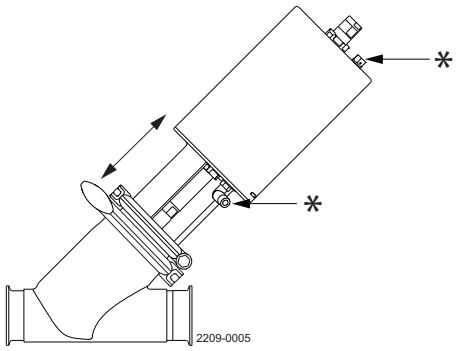

Open-/close

5 Operation

5.1 General operation

NOTE

Study the instructions thogouhly and pay special attention to the warnings!

Ensure that the valve operates smoothly.

The items refer to *Parts lists and exploded views* on page 49.

Always read *Technical Data* on page 45 thoroughly.

Always use Alfa Laval genuine spare parts. The warranty of Alfa Laval products is dependent on use of Alfa Laval genuine spare parts.

CAUTION

Alfa Laval cannot be held responsible for incorrect installation.

WARNING

Always release compressed air after use.

WARNING **Burn hazard!**

Never touch the valve or the pipelines when processing hot liquids or when sterilising.

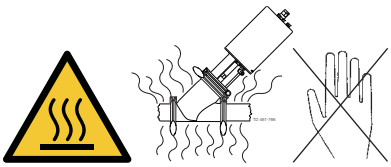

WARNING **Moving parts!**

Never touch moving parts if the actuator is supplied with compressed air.

* = Air

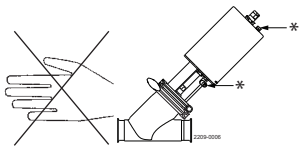

1 **Lubrication of valves:**

a) Ensure smooth movement between lip seal (25) and plug stem (367).

b) Lubricate the lip seal with Alfa Laval Lubricant if necessary (see *General maintenance* on page 33).

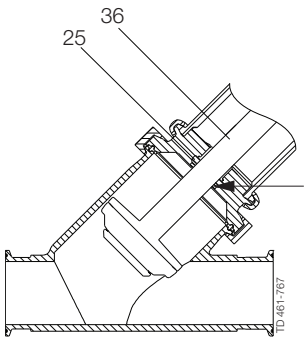

2

Lubrication of actuator

a) Ensure smooth movement of the actuator (the actuator is lubricated before delivery).

b) Lubricate all seals with Molykote Longterm 2 plus if necessary.

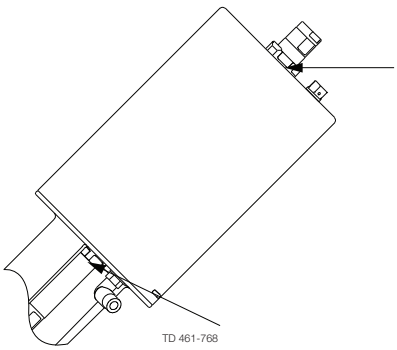

5.2 Troubleshooting

NOTE

Pay attention to possible faults.

Study the instructions thoroughly.

The items refer to *Parts lists and exploded views* on page 49.

Study the maintenance instructions thorouhgly before replacing worn parts - see *General maintenance* on page 33!

WARNING

Do **NOT** attempt to disassemble the actuator due to spring under load danger!

Do **NOT** attempt to cut the actuator open due to spring under load danger!

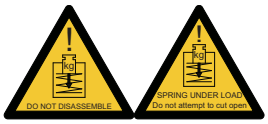

Problem	Cause/result	Repair
External product leakage	Worn or damaged lipseal and/or O-ring	• Replace the seals • Replace with seals of a different rubber grade
Internal product leakage	• Worn or product affected plug seal	• Replace the seal • Replace with a seal of a different rubber grade
	• Product deposits on the seat and/or plug	• Frequent cleaning
	• Product pressure exceeds actuator specification	• Replace with a high pressure actuator • Use auxiliary air on the spring side (do not exceed 3 bar/43.5 PSI). Alfa Laval article number = 9611995903. See *Safety Precautions* on page 12 and *General installation* on page 24.
Water hammer	The flow direction is the same as the closing direction	• The flow direction should be against the closing direction. See *General installation* on page 24. • Throttle air release of solenoid in top unit
The valve does not open/ close	Product pressure exceeds actuator specification	• Replace with a high pressure actuator • Reduce product pressure • Use auxiliary air on the spring side. Always use the pressure relief fittings (3 bar/43.5 PSI) on support side. Alfa Laval article number = 9611995903

If marked with a danger warning, do **NOT** attempt to cut the actuator open, due to spring under load.

5.3 Recommended Cleaning

WARNING **Risk of burns!**

Never touch the supplied product or the pipelines when sterilizing.



CAUTION

Always handle lye and acid with great care.



NOTE

The supplied product is designed for cleaning in place (CIP).

NaOH = Caustic soda.

HNO_3 = Nitric acid.

The cleaning agents must be stored/disposed of in accordance with current regulations/directives.

Examples of cleaning agents

NOTE

Use clean water free from chlorides.

Metric System

1. 1% by weight NaOH at 70°C

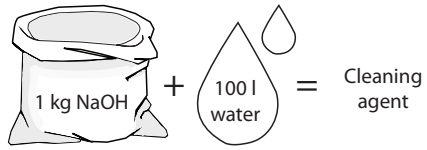

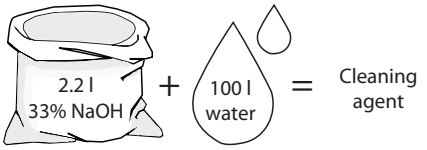

2. 0.5% by weight HNO_3 at 70°C

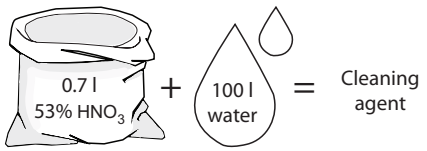

Imperial System

1. 1% by weight NaOH at 158°F

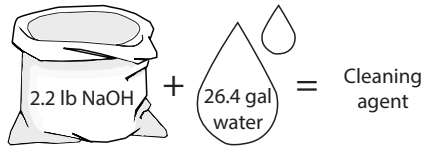

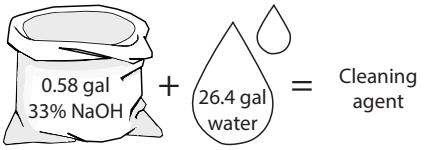

2. 0.5% by weight HNO_3 at 158°F

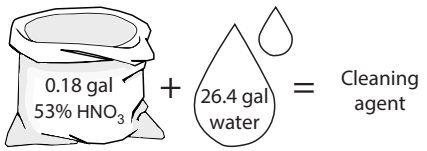

1. Avoid excessive concentration of the cleaning agent
   ⇒ **Dose gradually!**
2. Adjust the cleaning flow to the process
   Milk sterilization/viscous liquids ⇒ Increase the cleaning flow!

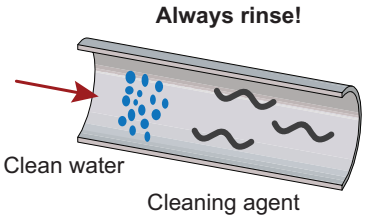

CAUTION

Always rinse well with clean water after the cleaning.

5.3.1 Cleaning

WARNING **Danger of burns!**

Never touch the valve or the pipelines when sterilizing.



NOTE

Pay special attention to the warnings!

Clean the plug and seats correctly.

Lift and lower valve plug momentarily!

This page is intentionally left blank.

6 Maintenance

6.1 General maintenance

NOTE

Maintain the valve regularly.

Study the instructions thoroughly and pay special attention to the warnings!

Always keep spare rubber seals and lip seals in stock.

Check the valve for smooth operation after service.

Always read *Technical Data* on page 45 thoroughly.

Always use Alfa Laval genue spare parts. The warranty of Alfa Laval products is dependent on use of Alfa Laval genuine spare parts.

CAUTION

Alfa Laval cannot be held responsible for incorrect installation.

WARNING

Always release compressed air after use.

WARNING **Burn hazard!**

Never service the valve when it is hot.

Never service the valve with valve and pipelines under pressure.

Atmospheric pressure required!

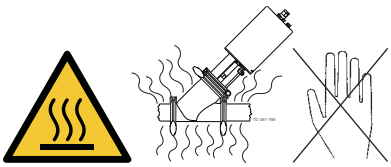

WARNING **Cutting hazard**

Moving parts!

Never stick your fingers through the valve ports if the actuator is supplied with compressed air.

Never touch the moving parts if the actuator is supplied with compressed air.

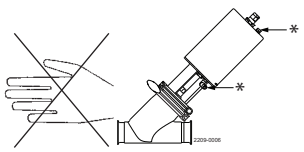

Next are some guidelines for maintenance and lubrication intervals. Please note that the guidelines are for normal working conditions in one shift.

	Product wetted seals	Actuator bushings complete
Preventive maintenance	**Replace after 12 months depending on working conditions**	**Replace after 5 years depending on working conditions**
Maintenance after leakage (leakage normally starts slowly)	**Replace at the end of the day**	**Replace when possible**
Planned maintenance	• Regular inspection for leakage and smooth operation • Keep a record of the valve • Use the statistics for inspection planning **Replace after leakage**	• Regular inspection for leakage and smooth operation • Keep a record of the actuator • Use the statistics for inspection planning **Replace after leakage**
Lubrication	**Before fitting** Alfa Laval Silicon based Food-grade Lubricant USDA H1 approved grease	**Before fitting** Molykote Longterm 2 plus

Pre-use check

1. Supply compressed air to the actuator.
2. Open and close the valve several times to ensure that it operates smoothly.

Pay special attention to the warnings!

Open/close!

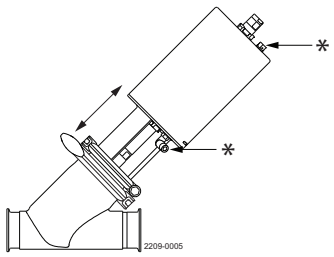

* = Air

Recommended spare parts

See *Alfa Laval online Spare part catalogue*.

6.1.1 Maintenance product contact parts made of plastic

These plastic parts are designed for safe contact with food and should only be used as intended, as stated in the product Instruction Manual provided with this product. Using these parts outside their intended purpose (e.g., exposure to excessive heat, harsh chemicals, or incompatible foods) may increase the risk of harmful substances migrating into food. Always use the product as intended to avoid risks.

Normal Usage Changes:

Minor scratches, slight discolouration over time, fading of printed markings, deformation

Changes Affecting Safety:

Cracks or chalkiness, blisters or chips, sticky or tarnished surfaces, unusual odours.

How to Prevent/Slow Down Deterioration:

- Use it within the permitted temperature limits and limits for CIP[1]
- Do not use abrasive cleaners or scouring pads
- Do not use in contact with foods for which it is not intended (See: product Instruction Manual)

Handling, Cleaning, and Storing Instructions

- Follow the recommended cleaning procedure and only use permitted chemicals or detergents in correct concentrations and temperatures
- Store in a cool, dry place, protected from UV-light

When to Replace

Replace the plastic part if you notice:

- Cracks, chalkiness, blisters, chips or sticky surface, discolouration (if it does not come from the media itself)
- Any change in appearance that raises doubts about safety

Conditions for Discontinuing Use

- If the part shows any of the safety-related deterioration signs above
- After a recommended period of use (see service interval)
- If the part has been exposed to conditions outside the product's (manufacturer's) instructions (e.g., high heat, harsh chemicals, excessive concentration/temperatures of CIP[1])

[1] Cleaning In Place

6.2 Dismantling the valve

NOTE

Study the instructions carefully.

The items refer to *Parts lists and exploded views* on page 49.

Handle scrap correctly.

NC = Normally closed.

NO = Normally open.

A/A = Air/air activated

WARNING

If the actuator is marked with a danger warning, do **NOT** attempt to cut the actuator open.

Do **NOT** attempt to disassemble the actuator due to spring under load danger!

Do **NOT** attempt to cut the actuator open due to spring under load danger!

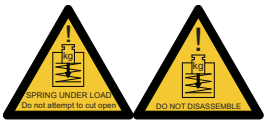

Shut-off valve

1. Supply compressed air to the actuator (only NC).
2. Loosen and remove clamp.
3. Release compressed air (only NC).
4. Lift away the actuator.
5. Remove body gasket.
6. Unscrew and remove valve plug.
7. Loosen and remove upper clamp.
8. Remove O-ring, lip seal and bushing in bonnet. (Use bushing tool and rubber mallet, see drawing)

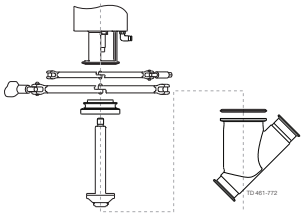

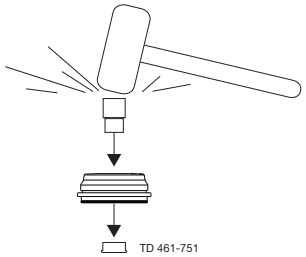

NOTE

Be careful not to damage the bushing.

Pay special attention to the warnings!

NOTE

For plug seal replacement please see *TR2 seal ring replacement* on page 37

6.3 TR2 seal ring replacement

1. Place the plug element on a firm support.
2. using a utility knife, partially AND CAREFULLY cut through the upper ring portion of the TR2 plug avoiding contact with stainless steel stem.
3. Force apart both cut ends of the plug for removal from stem).
4. TR2 plugs are installed by applying uniform pressure on all sides.(Pressure can be applied by using the seal assembly tool).

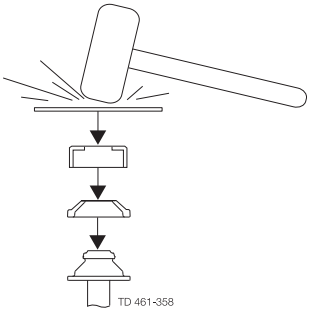

5. Using a piece of metal and a rubber mallet, place a precise tap to madke the TR2 plug snap on to the stem. Reverse the tool and tap again to secure proper fit.
6. Examine seal assembly to be sure the TR2 plug is properly mounted, holding the seal assembly in one hand - rotate the TR2 plug.
   (For proper CIP cleaning the TR2 plug should turn freely on the stem).

6.4 Valve assembly

NOTE

Study the instructions carefully.

The items refer to *Parts lists and exploded views* on page 49.

A/A = Air/air activated.

Reverse order of *Dismantling the valve* on page 36.

1. Lubricate O-ring (21) and lip seal (25) with Alfa Laval Lubricant.

2. Remember to tighten spindle and plug (use two 17 mm / 0.67 inch spanners).
   - Change-over plug tighten torque = **30 Nm / 22 lbf - ft**
   - Shut-off plug tighten torque = **20 Nm / 15 lbf - ft**

If there are vibrations in the pipeline, Alfa Laval recommends to use Loctite no. 243.

The clamps' thread must be lubricated before tightening - max. torque for the clamps is 10-12 Nm/ 8-9 lbf - ft.

WARNING

Pay special attention to the warnings.

6.5 Actuator types

Different actuator types for the SSV valve

In June 2016 the below change was implemented and the "removable yoke with bolts" version is thereby phased out and replaced by the "yoke without bolts" version.

> **NOTE**
>
> It is important to check for warnings marked on the actuator when servicing an actuator - see below table.

	Non-maintainable actuator	Fully maintainable actuator	Fully maintainable actuator
Actuator type	Spring under load and **cannot** be opened 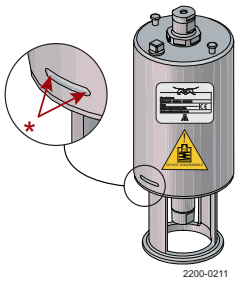 2200-0211 *) Lock wire opening is locked when warning is marked on actuator	Spring cage and can be opened 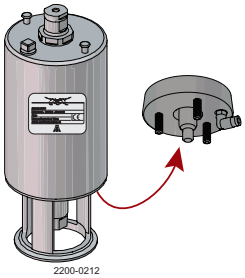 2200-0212	Spring cage and can be opened  2200-0213
Yoke type	Non-removable yoke	"Removable yoke with bolts". If the yoke with bolts is damaged it has to be replaced by the "yoke without bolts".	"Yoke without bolts"
Service	Not possible to service internally (it is not possible to change piston O-rings)	Yes	Yes
Marked with warnings	Yes	No	No
Year of production	From 2006	From 2006 to June 2016	From June 2016

6.6 Actuator Bushing Replacement (Non-maintainable Actuator)

WARNING

If the actuator is marked with one of the below warnings, do NOT attempt to disassemble it.

The spring inside is under load — any type of breakage of the actuator can lead to severe injury or even death!



Introduction

- The actuator service kit contains two bushings and four O-rings
- Mount the thick O-ring inside and the thin O-ring outside the bushing
- Lubricate the stem and O-rings with "Molykote Longterm 2 Plus" or an equivalent grease before sliding the new bushings onto the actuator stem



Introduction - Standard tubular box wrench

Use a 27 mm (11/16") tubular box wrench to unmount and/or mount the bushings.

This tool will allow the actuator stem to fit inside and will provide good access to the bushing placed in the actuator yoke end.

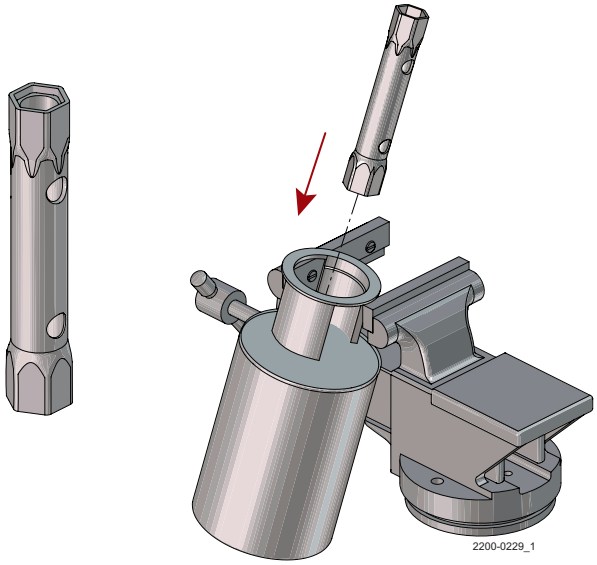

Introduction - Aligning spindle

The actuator spindle can in some cases be forced off centre by the internal spring, as shown.

In cases with misalignment of the actuator stem in relation to the bushing thread, as shown, the tubular box wrench together with a spindle for alignment is a great help and will ensure a reliable mounting of the bushing.

The aligning spindle can either be purchased from Alfa Laval (**9614198401**) which also include a 27 mm (1 1/16") tubular box wrench or it can be manufactured locally using below dimensions.

Dimension A is based on a tubular box wrench with a total length of 185 mm (7 1/4").

Dimensions
A = 280 mm (11")
B = 16 mm (0.63")
C = Rod Ø20 mm (0.79")
D = M12 x 1.5

Spindle forced off centre by spring inside actuator

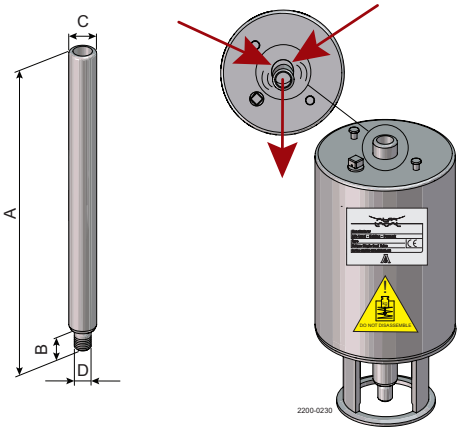

1. The actuator must be fixed in a vice, Alfa Laval recommend use of soft jaws.

   Be careful not to damage the yoke by over tightening and only fix carefully on the "yoke leg", as shown.

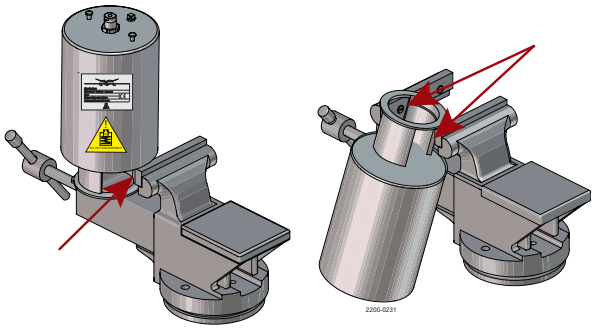

2. Remove the adaptor screw.

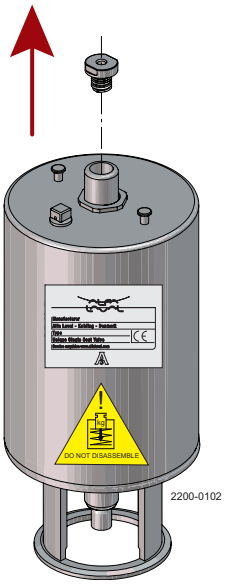

3 Slide the lubricated bushing onto the actuator stem.

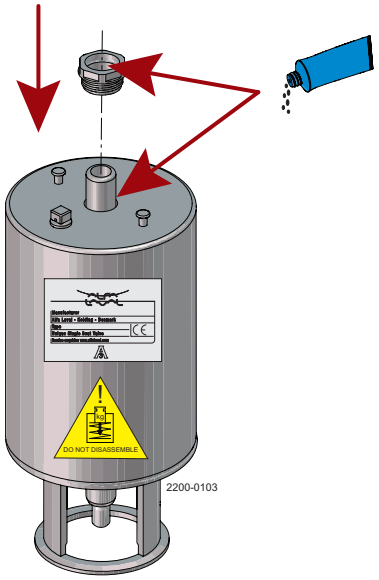

4 Fit the aligning spindle to the actuator stem and apply the tubular box wrench.

Aligning spindle **Tubular box wrench**

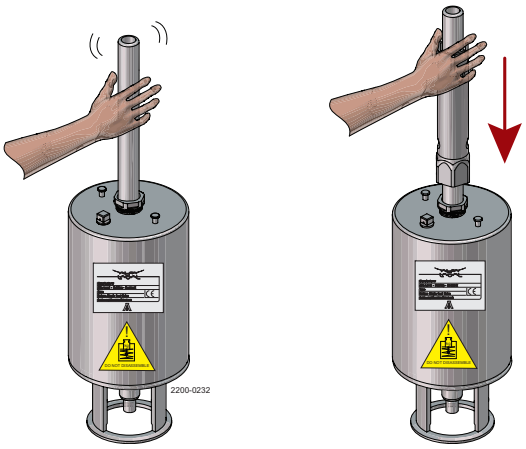

5 Now pull the aligning spindle to center the actuator stem in relation to the bushing thread. When centered, initiate fastening of the bushing. Ensure the thread catches evenly!

The bushing must only be tightened with a torque of 10 Nm (7 lb-ft) which is achievable by hand tightening only.

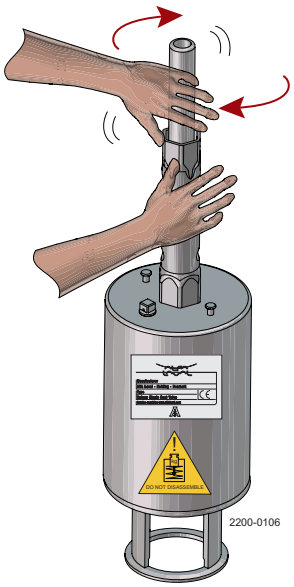

6 Mount adaptor screw.

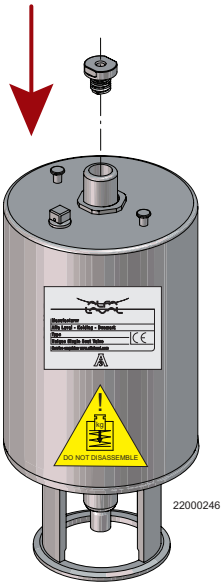

This page is intentionally left blank.

7 Technical Data

> **NOTE**
>
> Technical data must be observed during installation, operation and maintenance.
>
> All personnel should be informed about the technical data.

7.1 Technical data

Temperature	
Temperature range:	-10 °C to +140 °C / 14 °F to +284 °F (EPDM)

Pressure	
Max. product pressure:	1000 kPa / 145 PSI (10 bar)
Min. product pressure:	Full vacuum
Air pressure:	500 to 700 kPa / 72.5 to 101.5 PSI (5 - 7 bar)

Actuator function

- Pneumatic downward movement, spring return
- Pneumatic upward movement, spring return
- Pneumatic upward and downward movement (A/A)

7.2 Physical data

Materials	
Product wetted steel parts:	1.4404 (316L) (internal Ra < 0.8 µm / Ra < 32 µinch)
Other steel parts:	1.4301 (304)
External surface finish:	Semi-bright (blasted)
Internal surface finish:	Bright (polished), Ra < 0.8 µm / Ra < 32 µinch
Product wetted seals:	EPDM
Other seals:	NBR
Plug seal:	TR2 (floating PTFE design)

Weight

	Nominal size mm / inch		
DN/OD **51 mm / 2 inch**	**DN/OD** **63.5 mm / 2.5 inch**	**DN/OD** **76 mm / 3 inch**	**DN/OD** **101.6 mm / 4 inch**
8.6 kg / 19 lbs	11.1 kg / 24.5 lbs	18.6 kg / 41 lbs	27.1 kg / 60 lbs

This page is intentionally left blank.

8 Spare parts

For every delivered Alfa Laval Product, a spare part list is available.

This spare part list contains a range of the most common wear parts for the machinery. If any component not mentioned is required, please contact your local Alfa Laval representative for availability.

You can find our spare part catalogue at *https://hygienicfluidhandling-catalogue.alfalaval.com*.

Always use Alfa Laval genuine spare parts. The warranty of Alfa Laval products is dependent on use of Alfa Laval genuine spare parts.

8.1 Ordering spare parts

When ordering spare parts, please always state:

1. Serial number (if available)
2. Item number/spare part number (if available)
3. Capacity or other relevant identification

8.2 Alfa Laval service

Alfa Laval is represented in all larger countries of the world.

Do not hesitate to contact your local Alfa Laval representative, with any questions or requirement of spare parts for Alfa Laval equipment.

8.3 Warranty - Definition

WARNING

The rules of Intended use are absolute. Use of the supplied Alfa Laval product is allowed only when in compliance with the technical data supplied with the Intended use.

Differing utilisation, other than agreed with Alfa Laval Kolding A/S, exclude any liability and warranty.

No modification or alteration of the supplied Alfa Laval product is allowed, unless explicit permission is granted by Alfa Laval Kolding A/S.



Liability and warranty are excluded:

- If advice and instruction of operating instructions are ignored
- For incorrect operation or for insufficient maintenance of the supplied Alfa Laval product
- For any kind of change of function of the supplied Alfa Laval product without prior written agreement by Alfa Laval Kolding A/S
- If supplied Alfa Laval product is modified by non-authorised persons
- If using the supplied Alfa Laval product without attention of appropriate safety regulations, (see *Safety* on page 9)
- If protection equipment is not used and vessel process / ancillary equipment is not brought to a standstill
- If the supplied Alfa Laval product and ancillary parts are not properly maintained (to be executed in intervals and including fitting of prescribed replacement parts)

When exchanging parts, only original replacement parts, released from the manufacturer, must be used.

9 Parts lists and exploded views

9.1 Unique SSV Y-body

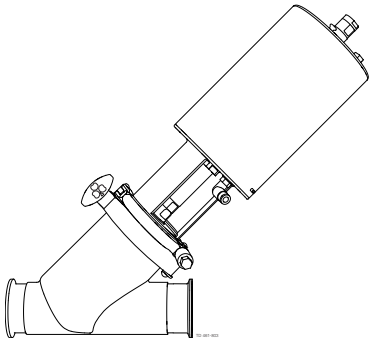

Normally Closed (NC)

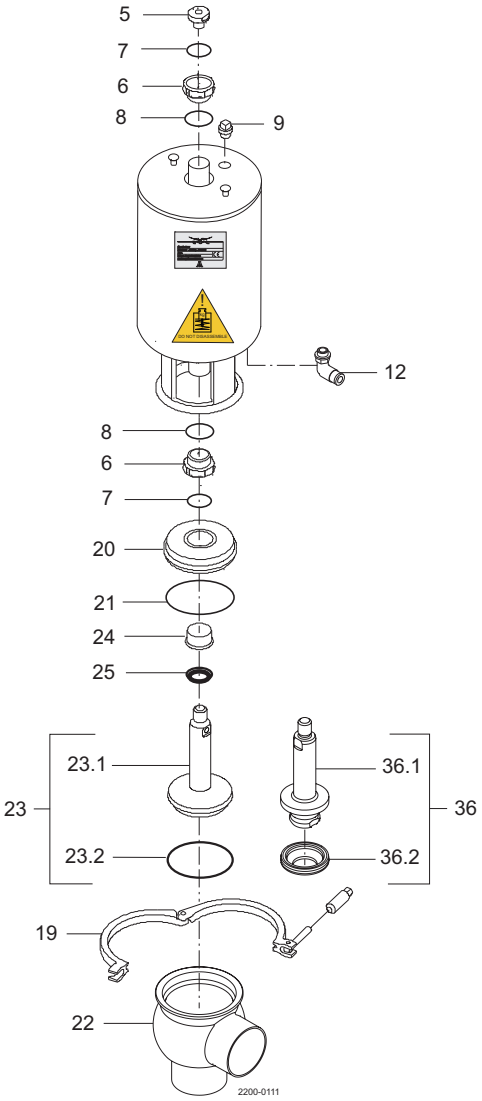

Pos.	Qty.	Denomination
		Actuator
		Lip seal set
5	1	Adapter
6	2	Bushing
7	2	O-ring
8	2	O-ring
9	1	Plug
12	1(2)	Air fitting
19	1	Clamp

Pos.	Qty.	Denomination
20	1	Bonnet
22	1	Valve body
24	1	Bushing
25	1	Lip seal
36	1	Plug, complete
36.1	1	Plug
36.2	1	Plug seal
61	1	Clamp, body
62	1	Gasket